QF® & QFS

NORDFAB Ducting

Duct Systems Product Catalogue

QF 21.2 English

New! 2 meter long laser welded duct

QF Process Ventilation Ductwork

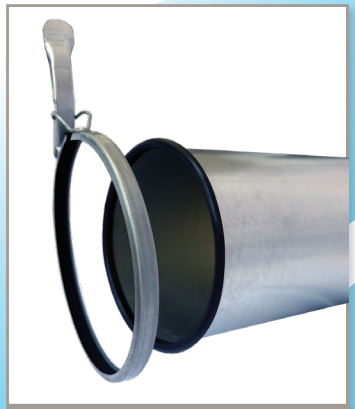

QFS Ductwork for Oil Mist & Coolants

Galvanised and 304SS stainless steel

The world's fastest ducting™

Ordering

Nordfab products may be ordered by product description:

Examples:

Duct Galv 100QF

Branch Galv 200QF 180QF 120QF

Reducer 304SS 120FLN 80FLN

Bend Galv 100QF 30Deg

End Types

If you do not specify an end type, we will supply as standard: QF ends for duct in sizes from 80mm to 710mm and Flanged ends for sizes above 710mm.

QF: Quick-Fit® rolled ends for quick connection to other QF components using the QF Clip.

FLI / FLN: Industry-standard Angle Ring.

Nordfab standard is Flange (FLI or FLN) attached loosely and retained in place using a vanstone lip. Upon customer request, the flange can be solid welded to product or provided loose (separate) with a NOFIT end. Flanges to be welded will require clocked location.

RAWFLEX: Raised dimple to retain flexible hose.

NOFIT: No Fitting. A raw end with standard dimensions based on product size.

RAWOD: Raw end without fitting. End dimension based on customer specified Outside Diameter.

RAWID: Raw end without fitting. End dimension based on customer specified Inside Diameter.

End Type	*Abbreviation*
Quick-Fit	QF
No Fit	NF
Raw ID	RI
Raw OD	RO
Rawflex	RF
Flange	AFL
Vanstone	VS

Table of Contents

Description	Page
Air Volume Chart	6
Back Pressure Flap Valve	29
Ball Joint	27
Bend Flanged	33
Bend Pressed	13
Bend Segmented	14-15
Boot Shoe	19
Branch	16
Cable for Grounding	9
CARZ Explosion Isolation Flap Valve	36
Clip, Premium	11
Clip, Standard	11
Cut-in 30°	18
Cut-in 90°	18
Cut-in Boot Shoe	19
Double Branch	16
Drop Out Box	28
Duct	8-9
Duct End Gasket	11
End Cap	21
Flanged Adapter	20
Flanged Duct	32
FLI Flange	34
FLN Flange	34
Floor Sweep	28
FSAZ Flange Gasket	34
Hose	26
Hose Adapter	20
Hose Clamp	26
Inline Spark Trap	35
Jet Cowl	27
KVDA Split Strap	12
KVDD Legs for Split Strap	12
Machine Adapter Expanded	21
Mesh End Cap	21

Description	Page
Microswitch	22
Oil Mist Drain	24
QF to FB Transition Piece	21
QFS Automatic Damper	24
QFS Gas Damper BRNE	37
QFS Manual Damper	24
QFS Slip Duct Kit	10
Reducer	18
Reed Relay	22
Regulating Damper	21
Regulation Cone	20
RGBL Automatic Diverter Valve	25
RGBM Automatic Diverter Valve	25
RGSL Manual Diverter Valve	25
RGSM Manual Diverter Valve	25
Roof Plate	31
SBAS Automatic Damper	22
SBBA Manual Damper	23
SBBB Automatic Damper	23
SBMS Manual Damper	22
Shield Cover Plate	22
Silencer	29
Sizing a Duct System	6
Slip Duct	10
Slip Duct Installation Instructions	7
Split Strap	12
Spraywall	30
SSAA Slide Gate, Manual	21
Suction Hood - Sputnik	28
Tabular Rivet Adapter	20
T-Branch	17
Transition Rectangular to Round	19
Ventilation Adapter	20
Wall Plate for Pipe	31
Weather Cowl	27
Y-Branch	17

Type	Description	Page
Duct & Clips		
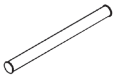	QF Duct	8-9
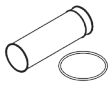	Slip Duct / QFS Slip Duct Kit	10
	QF Premium Clip	11
	QF Standard Clip	11
	Duct End Gasket	11
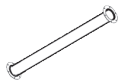	Flanged Duct FLI	32
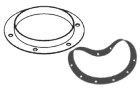	FLN / FLI Flange / FSAZ Flange Gasket	34
Bends		
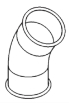	QF Pressed Bend	13
	QF Segmented Bend	14-15
	Flanged Segmented Bend	33
Branches		
	Branch Standard	16
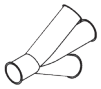	Double Branch	16
	Y-Branch	17
	T-Branch	17
	Cut-in 30°	18

Type	Description	Page
Branches		
	Cut-in 90°	18
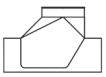	Cut-in Boot Shoe / Boot Shoe	19
Adapters		
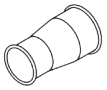	Reducer	18
	Transition Rectangular to Round	19
	Flanged Adapter	20
	Hose Adapter	20
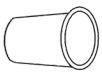	Regulation Cone	20
	Tabular Rivet Adapter	20
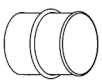	Ventilation Adapter	20
	Mesh End Cap	21
	End Cap	21
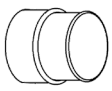	Machine Adapter Expanded	21
	QF to FB Transition Piece	21
Dampers		
	SSAA Slide Gate, Manual	21
	Regulating Damper	21

Type	Description	Page
Dampers		
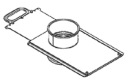	SMBS Manual Damper	22
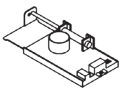	SBAS Automatic Damper & Accessories	22
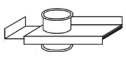	SBBA Manual Damper	23
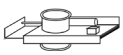	SBBB Automatic Damper	23
Hoses & Clamps		
	Hose	26
	Hose Clamp	26
Diverter Valves		
	RGSM Manual Diverter Valve	25
	RGBM Automatic Diverter Valve	25
	RGSL Manual Diverter Valve	25
	RGBL Automatic Diverter Valve	25
Hangers & Installation		
	KVDA Split Strap	12
	KVDD Legs for Split Strap	12
Accessories		
	Cable for Grounding	9
	Jet Cowl	27
	Ball Joint	27

Type	Description	Page
Accessories		
	Weather Cowl	27
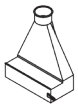	Floor Sweep	28
	Sputnik - Suction Hood	28
	Drop Out Box	28
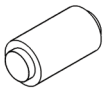	Silencer	29
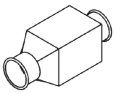	Back Pressure Flap Valve	29
	Spraywall	30
	Roof Plate	31
	Wall Plate for Pipe	31
	Inline Spark Trap	35
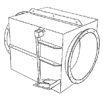	CARZ Explosion Isolation Flap Valve	36
	QFS Gas Damper BRNE	37
Special Applications		
	Oil Mist Drain	24
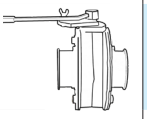	QFS Manual Damper	24
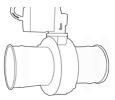	QFS Automatic Damper	24

Nordfab QF Clipped and Flanged ducting

Nordfab® ducting offers an unbeatable solution for all general purpose dust extraction duties.

QF® clipped and flanged ducting offers a complete range of diameters and accessories for easy-to-fit professional installations. Our QF duct has the distinctive rolled edge for easy joining with our Quick-Fit® Clip.

Manufactured from galvanised steel or stainless steel with laser welded seams on straight duct, which have smoother internal surfaces and provide greatly enhanced leak resistance.

Nordfab flanged ducting is supplied with pre-assembled and drilled loose flanges for ease of alignment during installation.

Who Uses Quick-Fit?

- Woodworking
- Furniture
- Metalworking
- Concrete
- Recycling
- Automotive
- Plastics
- Textiles
- Powder, Bulk and Solids
- Agriculture
- Paper
- Chemical
- Ventilation
- Many more

Advantages

- QF for fast installation with no special tools, no painting
- Easy to assemble installation components
- Neat slip duct connections to adapt and adjust ducting on site during installation
- FL offers additional security of bolted flanged connections for more rigorous applications
- Laser welded straight ducts for smoother surface and enhanced leak resistance
- Easy to extend or take apart completely for cleaning, reconfiguring or relocation
- Full range of accessories and installation components
- Adapters available to connect to and extend all other duct systems
- All you need from one comprehensive, tried and tested range
- Stainless steel also available

NOTE: When using system for overpressure and in a system carrying fine dust, it is advisable to use a flanged duct system. Discuss with Nordfab.

Nordfab QFS Sealed ducting

Nordfab sealed ducting is ideal for ”wet” applications such as oil mist, cutting fluids and coolants.
All bends, branches, reducers, and other items with joints or collars are caulked. When clipping the ductwork together, an additional nitrile gasket is placed between the parts to avoid leakage.

Who Uses Sealed Duct

- Steel mills
- Rolling mills
- Metalworking
- Rubber and plastic industry
- Hardening and heat treating industry
- Automotive industry
- Metalwork and engineering industry when:
  - Turning
  - Cutting
  - Milling
  - Grinding
  - Drilling

Oil Mist Health Hazards & Safety Risks

- Respiratory ailments
- Eczema and other skin conditions
- Increased risk of falls and related accidents
- Pollution of general ventilation system
- Damage to sensitive electronics
- Creates dirty environment

Advantages for using our oil mist and cutting fluid duct system

- QF Sealed Ducting for fast installation with no special tools, no painting
- Easy to assemble installation components
- Neat slip duct connections to adapt and adjust ducting onsite during installation
- Laser welded straight ducts for smoother surface and enhanced leak resistance
- Prevent leakage on the floor, limiting risk of slippery surfaces
- Easy to extend or take apart completely for cleaning, reconfiguring or relocation
- Full range of accessories and installation components
- Adapters available to connect to and extend all other duct systems
- All you need from one comprehensive, tried and tested range

Sizing Nordfab Ducting Systems

Nordfab offers assistance to customers who have never designed a ducting system. We can assist you with determining the correct duct size and configuration for optimal air flow. Please call your local representative for assistance.

Range of duct air flow volumes m³/h

Ø mm	10 m/s	12 m/s	15 m/s	18 m/s	20 m/s	22 m/s	25 m/s	27 m/s	29 m/s	31 m/s
80	181	217	271	326	362	398	452	489	525	561
100	283	339	424	509	566	622	707	763	820	877
125	442	530	663	795	884	972	1105	1193	1281	1370
140	554	665	831	998	1108	1219	1385	1496	1607	1718
150	636	763	954	1145	1272	1400	1590	1718	1845	1972
160	724	869	1086	1303	1448	1592	1810	1954	2099	2244
180	916	1099	1374	1649	1832	2015	2290	2473	2657	2840
200	1131	1357	1697	2036	2262	2488	2827	3054	3280	3506
224	1419	1702	2128	2554	2837	3121	3547	3831	4114	4398
250	1767	2121	2651	3181	3534	3888	4418	4771	5125	5478
300	2545	3054	3817	4580	5089	5598	6362	6871	7380	7889
315	2806	3367	4208	5050	5611	6172	7014	7575	8136	8697
350	3464	4156	5195	6235	6927	7620	8659	9352	10045	10737
400	4524	5429	6786	8143	9048	9953	11310	12215	13119	14024
450	5726	5871	8588	10306	11451	12569	14314	15459	16604	17749
500	7069	8482	10603	12724	14137	15551	17672	19085	20499	21913-
560	8867	10640	13300	15960	17734	19507	22167	23940	25714	27487
630	11222	13466	16833	20200	22444	24689	28055	30300	32544	34788
710	14253	17104	21380	25656	28506	31357	35633	38483	41334	44185

Using the Air Volume Chart

This chart allows you to choose the correct duct size for the air volume that is required. Different materials need to be conveyed at different velocities to prevent the material from falling out of the air stream. For example, wood chips and saw dust flow well between 18 – 25 m/s. Referring to the chart, a 100 mm duct will convey 622 m³/h at 22 m/s. This indicates that a 100 mm pickup on a machine will use 622 m3/h from the filtering system. Or working in reverse, if you know that a machine will require approximately 650 m3/h to remove the waste, then you should design a 100 mm duct for the application.

Design & Specification Tools

Nordfab offers fast and friendly specification, installation design, and quoting tools for planning ducting installations.

Coming Soon! **Quick-Fit Visual 3D Duct Design**, an online, easy-to-use tool which greatly simplifies designing an installation while providing automatic sizing and pressure loss calculations.

NordCAD™ is our CAD-based tool to assist with designing Nordfab ductwork installations. NordCAD allows a CAD user to place 2D illustrations of Nordfab QF Ducting and Flanged Ducting components into a CAD drawing.

Nordfab dealers can access our quoting and ordering tool to quickly obtain pricing or place orders.

QF Slip Duct Installation

Measure distance to be spanned.

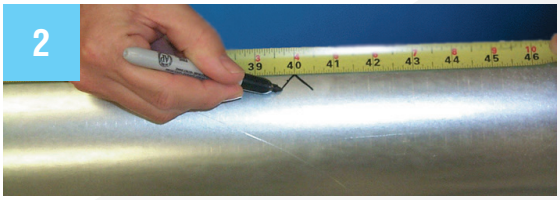

Mark distance to be spanned less 100 mm.

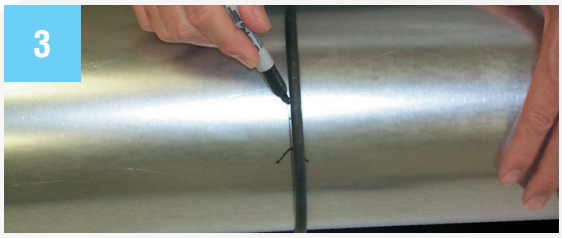

Use O-ring provided and mark for cut.

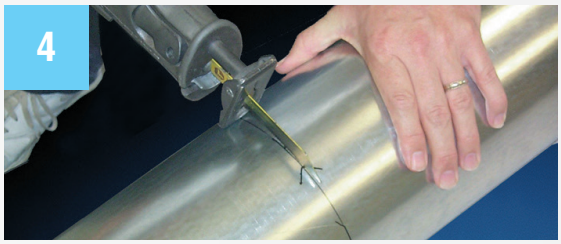

Drill access hole(s) and then cut the duct.

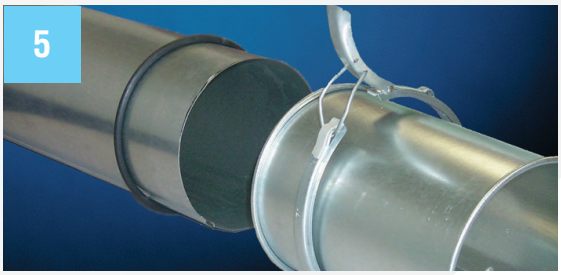

Put O-ring on the cut duct and slide a slip duct over the cut piece.

Snap QF Clip over O-ring and one end of slip duct.

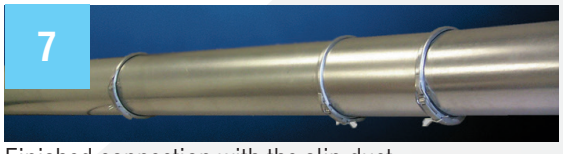

Finished connection with the slip duct.

NEW IMPROVED GASKET

Our new QFS Gasket is easier to install and does not require adhesives.

Sealing Joints Between Ducts

Nordfab's Oil Mist Gasket, combined with the gasket inside our QF Clips, provides dual protection against leakage where ducts are joined.

1 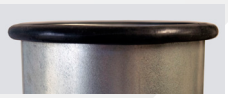

Place the gasket along the rolled edge of the duct, so that the top edge is evenly covered. Gasket is non-directional so it may be applied to either component in a joint (one gasket per joint).

2

Join the gasketed end of the duct to a non-gasketed end of the next part in the ducting run using a standard QF Clip.

NOTE: When dismantling ducting, always replace the gasket.

Nordfab's QF Slip Duct is an important component as it allows you to quickly adjust the length of your duct run.

Nordfab Europe duct manufacturing.

QF Duct Galvanised

ORDER EXAMPLES:
Duct W Galv 0,7mm 300QF L=1,5m
Duct L Galv 0,9mm 560QF L=2m

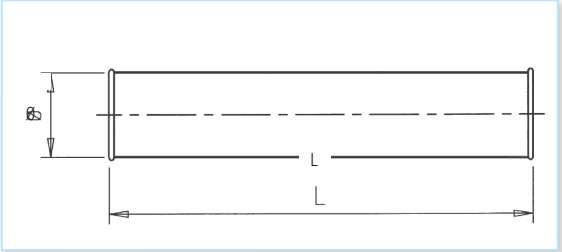

	Ø mm	L mm	Item no, 2000mm Galv	Weight kg	L mm	Item no, 1500mm Galv	Weight kg	L mm	Item no, 1000mm Galv	Weight kg	T mm
Welded Seam	080	1983	8240020381	2,76	1483	8240020380	2,07	983	8240020379	1,38	0,7
	100	1983	8240020384	3,45	1483	8240020383	2,59	983	8240020382	1,73	0,7
	125	1983	8240020387	4,31	1483	8240020386	3,24	983	8240020385	2,16	0,7
	140	1983	8240020390	4,83	1483	8240020389	3,62	983	8240020388	2,42	0,7
	150	1983	8240020393	5,18	1483	8240020392	3,88	983	8240020391	2,59	0,7
	160	1983	8240020396	5,52	1483	8240020395	4,14	983	8240020394	2,76	0,7
	180	1967	8240020399	6,21	1476	8240020398	4,66	967	8240020397	3,11	0,7
	200	1967	8240020402	6,90	1476	8240020401	5,18	967	8240020400	3,45	0,7
	224	1967	8240020405	7,73	1476	8240020404	5,80	967	8240020403	3,86	0,7
	250	1967	8240020408	8,63	1476	8240020407	6,47	967	8240020406	4,31	0,7
	300	1967	8240020411	10,35	1467	8240020410	7,76	967	8240020409	5,18	0,7
	315	1967	8240020414	10,87	1467	8240020413	8,15	967	8240020412	5,44	0,7
	350	1967	8240020417	12,08	1467	8240020416	9,06	967	8240020415	6,04	0,7
	400	1967	8240020420	17,75	1467	8240020419	13,31	967	8240020418	8,87	0,9
Lockformed Seam	450	1967	8240020423	19,97	1467	8240020422	14,97	967	8240020421	9,98	0,9
	500	1967	8240020426	22,18	1467	8240020425	16,64	967	8240020424	11,09	0,9
	560	1967	8240020429	24,85	1467	8240020428	18,63	967	8240020427	12,42	0,9
	630	1967	8240020432	27,95	1467	8240020431	20,96	967	8240020430	13,98	0,9
	710	1967	8240020435	31,50	1467	8240020434	23,63	967	8240020433	15,75	0,9

QF Duct 304SS

	Ø mm	L mm	Item no. 2000mm 304SS	Weight kg	L mm	Item no. 1500mm 304SS	Weight kg	L mm	Item no. 1000mm 304SS	Weight kg	L mm	T mm
Welded Seam	080	1983	8240020721	2,76	1483	8240020720	2,07	983	8240020719	1,38	483	0,7
	100	1983	8240020724	3,45	1483	8240020723	2,59	983	8240020722	1,73	483	0,7
	125	1983	8240020727	4,31	1483	8240020726	3,24	983	8240020725	2,16	483	0,7
	140	1983	8240020730	4,83	1483	8240020729	3,62	983	8240020728	2,42	483	0,7
	150	1983	8240020733	5,18	1483	8240020732	3,88	983	8240020731	2,59	483	0,7
	160	1983	8240020736	5,52	1483	8240020735	4,14	983	8240020734	2,76	483	0,7
	180	1967	8240020739	6,21	1476	8240020738	4,66	967	8240020737	3,11	467	0,7
	200	1967	8240020742	6,90	1476	8240020741	5,18	967	8240020740	3,45	467	0,7
	224	1967	8240020745	7,73	1476	8240020744	5,80	967	8240020743	3,86	467	0,7
	250	1967	8240020748	8,63	1476	8240020747	6,47	967	8240020746	4,31	467	0,7
	300	1967	8240020751	10,35	1467	8240020750	7,76	967	8240020749	5,18	467	0,7
	315	1967	8240020754	10,87	1467	8240020753	8,15	967	8240020752	5,44	467	0,7
	350	1967	8240020757	12,08	1467	8240020756	9,06	967	8240020755	6,04	467	0,7
	400	1967	8240020760	13,80	1467	8240020759	10,35	967	8240020758	6,90	467	0,9
Lockformed Seam	450	1967	8240020763	15,53	1467	8240020762	11,65	967	8240020761	7,76	467	0,9
	500	1967	8240020766	17,25	1467	8240020765	12,94	967	8240020764	8,63	467	0,9
	560	1967	8240020769	19,32	1467	8240020768	14,49	967	8240020767	9,66	467	0,9
	630	1967	8240020772	21,74	1467	8240020771	16,31	967	8240020770	10,87	467	0,9
	710	1967	8240020775	24,50	1467	8240020774	18,38	967	8240020773	12,25	467	0,9

New! For heavier duty applications
Duct with 1,25mm wall thickness

	Ø mm	L mm	Item no. 2m Galv	Weight kg
Welded Seam	080	1983	8240020381	2,76
	100	1983	8240020448	6,16
	125	1983	8240020436	7,70
	140	1983	8240020437	8,63
	150	1983	8240020438	9,24
	160	1983	8240020439	9,86
	180	1967	8240020440	11,09
	200	1967	8240020441	12,32
	224	1967	8240020442	13,80
	250	1967	8240020443	15,41
	300	1967	8240020444	18,49
	315	1967	8240020445	19,41
	350	1967	8240020446	21,57
	400	1967	8240020447	24,65
Lockformed Seam	450	1967	8240020449	27,73
	500	1967	8240020450	30,81
	560	1967	8240020451	34,51
	630	1967	8240020452	38,82
	710	1967	8240020453	43,75

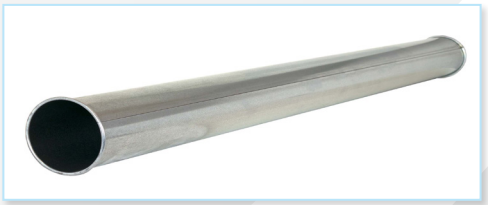

Cable for Grounding

L mm	Item no.
150	8210004918
300	8210004919
500	8210004920

ORDER EXAMPLE:
Cable for grounding incl. fittings L=150mm

Prevents buildup of static electricity.
Must be requested at time order is placed —Nordfab will provide the grounding wires as well as ductwork pre-installed with wire connection hardware.

QF Slip Duct

	Ø mm	Item no. Galv	Item no. 304SS	L mm	T mm	Weight kg
Welded Seam	080	8210001642	8210001200	278	0,7	0,5
	100	8210001643	8210001201	278	0,7	0,6
	125	8210001644	8210001202	278	0,7	0,7
	140	8210001645	8210001203	278	0,7	0,8
	150	8210001646	8210001204	278	0,7	0,9
	160	8210001647	8210001205	278	0,7	0,9
	180	8210001648	8210001206	271	0,7	1,0
	200	8210001649	8210001207	271	0,7	1,2
	224	8210001650	8210001208	271	0,7	1,3
	250	8210001651	8210001209	271	0,7	1,4
	300	8210001652	8210001210	262	0,7	1,7
	315	8210001653	8210001211	262	0,7	1,8
	350	8210001654	8210001212	262	0,7	2,0
	400	8210001655	8210001213	262	0,9	2,9
Lockformed Seam	450	8210001656	8210001214	262	0,9	3,3
	500	8210001657	8210001215	262	0,9	3,7
	560	8210001658		262	0,9	4,1
	630	8210001659		262	0,9	4,6
	710	8210001660		262	0,9	5,2

ORDER EXAMPLE:
Slip Duct W Clip and O-Ring Galv 0,7mm 100QF

This item includes:
1 pcs Slip Duct
1 pcs Rubber O-ring
1 pcs QF Clip Standard

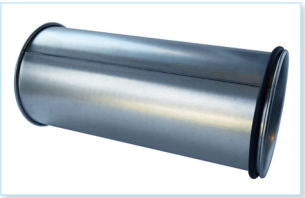

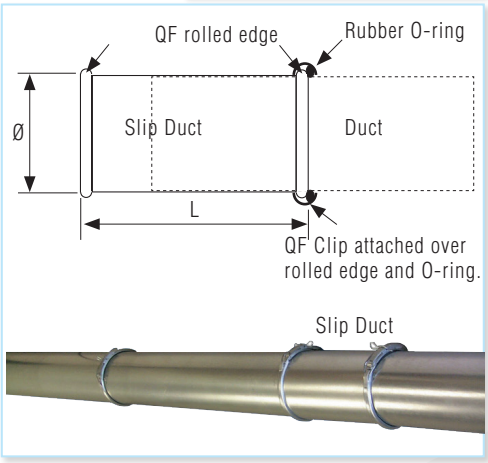

ORDER EXAMPLE:
Slip Duct w/O-ring QFS Galv 0,7mm 224QF

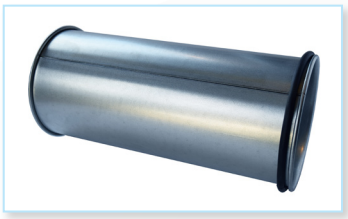

QFS Slip Duct in the Sealed version includes,

- 1 Slip Duct dim. Ø XXX
- 1 pcs. QFS Clip
- 2 pcs. O-rings
- 1 Duct End Gasket

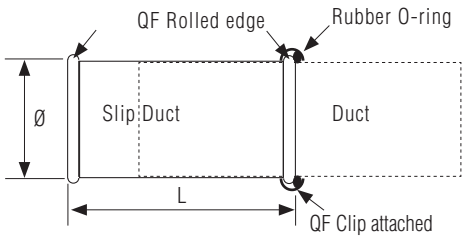

QFS Slip Duct Kit

Ø mm	Item no. Galv	L mm	T mm	Weight kg
080	8210001238	278	0,7	0,5
100	8210001239	278	0,7	0,6
125	8210001240	278	0,7	0,7
140	8210001241	278	0,7	0,8
150	8210001242	278	0,7	0,9
160	8210001243	278	0,7	0,9
180	8210001244	271	0,7	1,0
200	8210001245	271	0,7	1,2
224	8210001246	271	0,7	1,3
250	8210001247	271	0,7	1,4
300	8210001248	262	0,7	1,7
315	8210001249	262	0,7	1,8
350	8210001250	262	0,7	2,0
400	8210001251	262	0,9	2,9

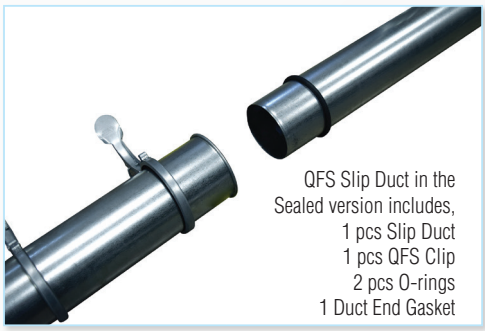

QFS Slip Duct in the Sealed version includes,
1 pcs Slip Duct
1 pcs QFS Clip
2 pcs O-rings
1 Duct End Gasket

QF Premium Clip, for tougher applications

Ø mm	Item no. Galv	Item no. QFS Premium Clip and Duct End Gasket Kit	Weight kg
80	8210000693	8210000712	0,11
100	8210000694	8210000713	0,12
125	8210000695	8210000714	0,14
140	8210000696	8210000715	0,15
150	8210000697	8210000716	0,19
160	8210000698	8210000717	0,24
180	8210000699	8210000718	0,27
200	8210000700	8210000719	0,28
224	8210000701	8210000720	0,30
250	8210000702	8210000721	0,32
300	8210000703	8210000722	0,59
315	8210000704	8210000723	0,63
350	8210000705	8210000724	0,69
400	8210000706	8210000725	0,72
450	8210000707		0,81
500	8210000708		0,87
560	8210000709		0,93
630	8210000710		1,00
710	8210000711		1,14

ORDER EXAMPLE:
Clip P Galv 160QF Nitrile

ORDER EXAMPLE:
Gasket QFS Nitrile 100QF

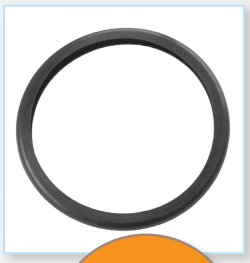

NEW IMPROVED DESIGN

Technical Data: Nitrile

- General purpose oil resistant polymer
- Performs well with many oil, water and hydraulic fluid applications
- Good tear resistance
- Should not be used with solvents such as acetone, MEK, ozone, chlorinated hydrocarbons, and nitro hydrocarbons
- Conducts electricity
- Classification:1. ASTM D-2000 M2BG510 A24 B34 EO14 EO34 EF11 EF21
- Temperature range: -34° C to +107°C / intermittent: +138° C

Duct End Gasket

Ø mm	Gasket Only Item no.
80	8010006100
100	8010006101
125	8010006101
140	8010006102
150	8010006102
160	8010006102
180	8010006103
200	8010006104
224	8010006104
250	8010006105
300	8010006106
315	8010006106
350	8010006107
400	8010006107

QF Clip, Standard

Ø mm	Item no. Galv	Item no. 304SS	Weight kg
80	8210000745	8210000726	0,05
100	8210000746	8210000727	0,05
125	8210000747	8210000728	0,07
140	8210000748	8210000729	0,07
150	8210000749	8210000730	0,08
160	8210000750	8210000731	0,08
180	8210000751	8210000732	0,16
200	8210000752	8210000733	0,18
224	8210000753	8210000734	0,24
250	8210000754	8210000735	0,27
300	8210000755	8210000736	0,40
315	8210000756	8210000737	0,44
350	8210000757	8210000738	0,49
400	8210000758	8210000739	0,56
450	8210000759	8210000740	0,62
500	8210000760	8210000741	0,69
560	8210000761	8210000742	0,78
630	8210000762	8210000743	0,90
710	8210000763		1,00

ORDER EXAMPLE:
Clip S Galv 160QF Nitrile

KVDA Split Strap

Ø mm	Item no. Galv	Item no. 304SS	L mm	T mm
80	8210001108	8210001276	25	3
100	8210001109	8210001277	25	3
120	8210001110		25	3
125	8210001111	8210001278	25	3
140	8210001112	8210001279	25	3
150	8210001113	8210001280	25	3
160	8210001114	8210001281	25	3
180	8210001115	8210001282	25	3
200	8210001116	8210001283	25	3
224	8210001117	8210001284	25	3
250	8210001118	8210001285	25	3
280	8210001119		30	3
300	8210001120	8210001286	30	3
315	8210001121	8210001287	30	3
325	8210001122		30	3
350	8210001123	8210001288	30	3
400	8210001124	8210001289	30	3
450	8210001125	8210001290	30	3
500	8210001126	8210001291	30	3
550	8210001127		40	3
560	8210001128		40	3
600	8210001129		40	3
630	8210001130		40	3
650	8210001131		40	3
710	8210001132		40	3
800	8210001133		40	3

ORDER EXAMPLE:
KVDA Split Strap Galv 3mm 560mm

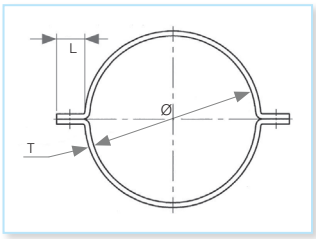

Galvanised
Incl. bolt and nut.

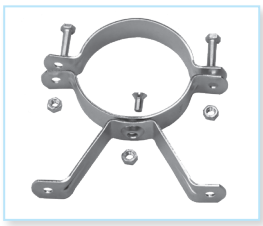

Duct mounted with Split Strap and Legs for Split Strap.

KVDD Legs for Split Strap

ORDER EXAMPLE:
KVDD Legs for Split Strap Galv 180mm 315mm

Ø mm	Item no. Galv	T mm	L mm	Weight kg
80 to 160	8210003377	2,5	65	0,12
180 to 315	8210003378			0,17
350	8210003379	3,0	235	0,35
400	8210003380		260	0,40
450	8210003381		285	0,45
500	8210003382		310	0,50
550	8210003383		= .5(Ø) + 100 mm	0,55
600	8210003384			0,60
650	8210003385			0,65
700	8210003386			0,70
800	8210003387			0,80

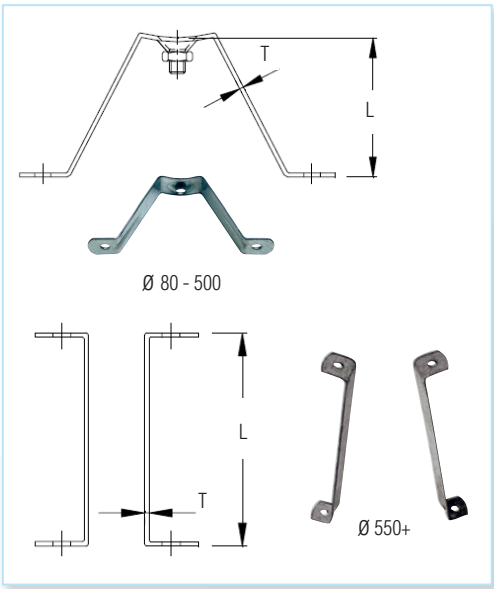

QF Duct System installed

QFS Duct System installed

QF Pressed Bends (long radius)

R=1,0 or 1,5 x diameter to centreline

ORDER EXAMPLE:
Bend Pressed Galv 0,9mm 100QF 60Deg R=1,5

90° Pressed Bends

Ø mm	Item no. Galv	Item no. QFS Galv	R mm	T mm	Weight kg
080	8210000178	8210000238	120	0,9	0,4
100	8210000183	8210000243	150		0,5
125	8210000188	8210000248	190		0,8
140	8210000193	8210000253	210		0,9
150	8210000198	8210000258	225		1,1
160	8210000203	8210000263	240		1,2
180	8210000208	8210000268	270		1,6
200	8210000213	8210000273	300		1,9
224	8210000218	8210000278	337		2,4
250	8210000223	8210000283	375		3,0
300	8210000228	8210000288	450		3,2
315	8210000233	8210000293	472		5,0

60° Pressed Bends

Ø mm	Item no. Galv	Item no. QFS Galv	R mm	T mm	Weight kg
080	8210000142	8210000237	120	0,9	0,3
100	8210000182	8210000242	150		0,4
125	8210000187	8210000247	190		0,6
140	8210000192	8210000252	210		0,6
150	8210000197	8210000257	225		0,7
160	8210000202	8210000262	240		0,8
180	8210000207	8210000267	270		1,2
200	8210000212	8210000272	300		1,3
224	8210000217	8210000277	337		1,7
250	8210000222	8210000282	375		1,9
300	8210000227	8210000287	450		2,4
315	8210000232	8210000292	472		2,5

45° Pressed Bends

Ø mm	Item no. Galv	Item no. QFS Galv	R mm	T mm	Weight kg
080	8210000141	8210000236	120	0,9	0,2
100	8210000181	8210000241	150		0,3
125	8210000186	8210000246	190		0,4
140	8210000191	8210000251	210		0,4
150	8210000196	8210000256	225		0,5
160	8210000201	8210000261	240		0,6
180	8210000206	8210000266	270		0,9
200	8210000211	8210000271	300		1,0
224	8210000216	8210000276	337		1,6
250	8210000221	8210000281	375		1,6
300	8210000226	8210000286	450		2,3
315	8210000231	8210000291	472		2,4

30° Pressed Bends

Ø mm	Item no. Galv	Item no. QFS Galv	R mm	T mm	Weight kg
080	8210000140	8210000235	120	0,9	0,2
100	8210000180	8210000240	150		0,3
125	8210000185	8210000245	190		0,3
140	8210000190	8210000250	210		0,4
150	8210000195	8210000255	225		0,5
160	8210000200	8210000260	240		0,5
180	8210000205	8210000265	270		0,7
200	8210000210	8210000270	300		0,9
224	8210000215	8210000275	337		1,3
250	8210000220	8210000280	375		1,5
300	8210000225	8210000285	450		2,2
315	8210000230	8210000290	472		2,2

15° Pressed Bends

Ø mm	Item no. Galv	Item no. QFS Galv	R mm	T mm	Weight kg
080	8210000174	8210000234	120	0,9	0,1
100	8210000179	8210000239	150		0,2
125	8210000184	8210000244	190		0,4
140	8210000189	8210000249	210		0,4
150	8210000194	8210000254	225		0,4
160	8210000199	8210000259	240		0,4
180	8210000204	8210000264	270		0,5
200	8210000209	8210000269	300		0,7
224	8210000214	8210000274	337		0,9
250	8210000219	8210000279	375		0,9
300	8210000224	8210000284	450		1,3
315	8210000229	8210000289	472		1,3

QF Segmented Bends
R=1,5 x diameter to centreline

ORDER EXAMPLE:
Bend Seg Galv 0,9mm 400QF 30Deg R=1,5

90° Segmented bends

Ø mm	Item no. Galv	Item no. 304SS	Item no. QFS Galv	R mm	T mm	Weight kg
080		8210000297		120	0,7	0,5
100		8210000301		150	0,7	0,8
125		8210000305		190	0,7	0,8
140		8210000309		210	0,7	1,1
150		8210000313		225	0,7	1,1
160		8210000317		240	0,7	1,2
180		8210000321		270	0,7	1,6
200		8210000325		300	0,7	1,9
224		8210000329		337	0,7	2,4
250	8210000419	8210000333		375	0,7	4,0
300	8210000424	8210000337		450	0,7	4,1
315	8210000429	8210000341		472,5	0,7	5,9
350	8210000434	8210000345	8210000675	525	0,7	6,8
400	8210000439	8210000349	8210000680	600	0,7	8,8
450	8210000444	8210000353		675	0,7	10,9
500	8210000449	8210000357		750	0,7	13,3
560	8210000454			840	0,9	20,9
630	8210000459			945	0,9	26,1
710	8210000464			1065	0,9	33,2

60° Segmented bends

Ø mm	Item no. Galv	Item no. 304SS	Item no. QFS Galv	R mm	T mm	Weight kg
080		8210000296		120	0,7	0,3
100		8210000300		150	0,7	0,4
125		8210000304		190	0,7	0,6
140		8210000308		210	0,7	0,7
150		8210000312		225	0,7	0,7
160		8210000316		240	0,7	0,8
180		8210000320		270	0,7	1,2
200		8210000324		300	0,7	1,3
224		8210000328		337	0,7	1,7
250	8210000418	8210000332		375	0,7	2,5
300	8210000423	8210000336		450	0,7	2,7
315	8210000428	8210000340		472.5	0,7	3,9
350	8210000433	8210000344	8210000674	525	0,7	4,8
400	8210000438	8210000348	8210000679	600	0,7	6,3
450	8210000443	8210000352		675	0,7	7,7
500	8210000448	8210000356		750	0,7	9,4
560	8210000453			840	0,9	14,6
630	8210000458			945	0,9	18,1
710	8210000463			1065	0,9	22,9

45° Segmented bends

Ø mm	Item no. Galv	Item no. 304SS	Item no. QFS Galv	R mm	T mm	Weight kg
080		8210000295		120	0,7	0,2
100		8210000299		150	0,7	0,3
125		8210000303		190	0,7	0,4
140		8210000307		210	0,7	0,5
150		8210000311		225	0,7	0,5
160		8210000315		240	0,7	0,6
180		8210000319		270	0,7	0,9
200		8210000323		300	0,7	1,0
224		8210000327		337	0,7	1,6
250	8210000417	8210000331		375	0,7	1,9
300	8210000422	8210000335		450	0,7	2,0
315	8210000427	8210000339		472.5	0,7	2,9
350	8210000432	8210000343	8210000673	525	0,7	3,8
400	8210000437	8210000347	8210000678	600	0,7	5,1
450	8210000442	8210000351		675	0,7	6,2
500	8210000447	8210000355		750	0,7	7,5
560	8210000452			840	0,9	11,4
630	8210000457			945	0,9	14,2
710	8210000462			1065	0,9	17,7

30° Segmented bends

Ø mm	Item no. Galv	Item no. 304SS	Item no. QFS Galv	R mm	T mm	Weight kg
080		8210000294		120	0,7	0,2
100		8210000298		150	0,7	0,3
125		8210000302		190	0,7	0,3
140		8210000306		210	0,7	0,5
150		8210000310		225	0,7	0,5
160		8210000314		240	0,7	0,5
180		8210000318		270	0,7	0,7
200		8210000322		300	0,7	0,9
224		8210000326		337	0,7	1,3
250	8210000416	8210000330		375	0,7	1,3
300	8210000421	8210000334		450	0,7	1,4
315	8210000426	8210000338		472.5	0,7	2,0
350	8210000431	8210000342	8210000672	525	0,7	2,9
400	8210000436	8210000346	8210000677	600	0,7	3,8
450	8210000441	8210000350		675	0,7	4,6
500	8210000446	8210000354		750	0,7	5,6
560	8210000451			840	0,9	8,2
630	8210000456			945	0,9	10,2
710	8210000461			1065	0,9	12,6

15° Segmented bends

Ø mm	Item no. Galv	Item no. 304SS	Item no. QFS Galv	R mm	T mm	Weight kg
080		8210003424		120	0,7	0,3
100		8210003425		150	0,7	0,3
125		8210003426		190	0,7	0,4
140		8210003427		210	0,7	0,4
150		8210003428		225	0,7	0,5
160		8210003429		240	0,7	0,5
180		8210003430		270	0,7	0,5
200		8210003431		300	0,7	0,5
224		8210003432		337	0,7	0,6
250	8210000415	8210003433		375	0,7	1,3
300	8210000420	8210003434		450	0,7	1,4
315	8210000425	8210003435		472.5	0,7	2,0
350	8210000430	8210003436	8210000671	525	0,7	2,9
400	8210000435	8210003437	8210000676	600	0,7	3,8
450	8210000440	8210003438		675	0,7	4,6
500	8210000445	8210003439		750	0,7	5,6
560	8210000450			840	0,9	8,2
630	8210000455			945	0,9	10,2
710	8210000460			1065	0,9	12,6

Segmented bends with other radius available

Ø mm	R=1xD	R=2xD	R=3xD	R=4xD	R=5xD
125 - 200	2.5 x price	3.0 x price	3.5 x price	4.0 x price	4.5 x price
225 - 315	2.0 x price	2.2 x price	2.5 x price	3.0 x price	4.0 x price
350 - 1000	1.0 x price	1.5 x price	2.0 x price	2.5 x price	3.0 x price

QF Branch Standard

Ø A mm	Ø B mm	Ø C mm	Item no. Galv	Item no. QFS Galv	T mm
080	080	080	8240000444	8240003177	0,7
100	100	100	8240000447	8240003180	0,7
125	125	125	8240000453	8240003186	0,7
140	140	140	8240000463	8240003196	0,7
150	150	150	8240000478	8240003211	0,7
160	160	160	8240000499	8240003232	0,7
180	180	180	8240000527	8240003260	0,7
200	200	200	8240000563	8240003296	0,7
224	224	224	8240000608	8240003341	0,7
250	250	250	8240000663	8240003396	0,7
300	300	300	8240000718	8240003451	0,7
315	315	315	8240000784	8240003517	0,7
350	350	350	8240000850	8240003583	0,7
400	400	400	8240000928	8240003661	0,9
450	450	450	8240001006		0,9
500	500	500	8240001084		0,9
560	560	560	8240001150		0,9
630	630	630	8240001216		0,9
710	710	710	8240001282		0,9

ORDER EXAMPLE:
Branch Std Galv 0,7mm 80QF 80QF 80QF 30Deg

For Branches with other end dimensions, order by description or visit our website for current item codes

L = (B x 2) + 206
Example L=125x2) +206=456
øC must be smaller than or equal to øA
øB must be smaller than or equal to øC

Length of B leg and C leg is always equal

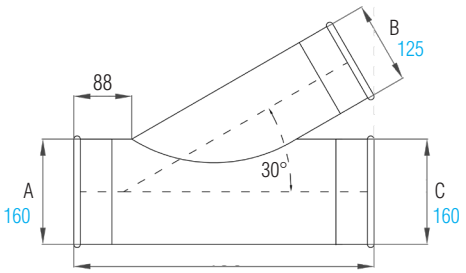

For Double Branches with other end dimensions, order by description or visit our website for current item codes

ORDER EXAMPLE:
Branch Double Galv 0,7mm 160QF 140QF 150QF 140QF 30Deg

Length of B leg, C leg, and D leg is always equal

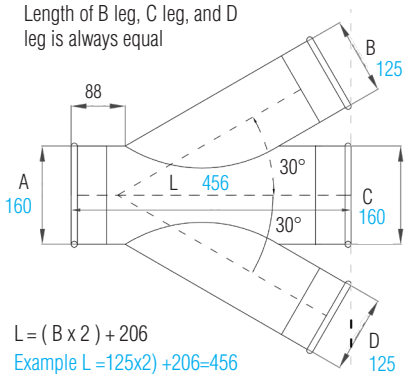

L = (B x 2) + 206
Example L =125x2) +206=456
øC must be smaller than or equal to øA
øB must be smaller than or equal to øC
øD must be smaller than or equal to øC

QF Double Branch

Ø A mm	Ø B mm	Ø C mm	Ø D mm	Item no. Galv	Item no. QFS Galv	T mm
080	080	080	080	8240002253	8240004245	0,7
100	100	100	100	8240002256	8240004248	0,7
125	125	125	125	8240002262	8240004254	0,7
140	140	140	140	8240002272	8240004264	0,7
150	150	150	150	8240002287	8240004279	0,7
160	160	160	160	8240002308	8240004300	0,7
180	180	180	180	8240002336	8240004328	0,7
200	200	200	200	8240002372	8240004364	0,7
224	224	224	224	8240002417	8240004409	0,7
250	250	250	250	8240002472	8240004464	0,7
300	300	300	300	8240002527	8240004519	0,7
315	315	315	315	8240002593	8240004585	0,7
350	350	350	350	8240002659	8240004651	0,7
400	400	400	400	8240002737	8240004729	0,9
450	450	450	450	8240002815		0,9
500	500	500	500	8240002893		0,9
560	560	560	560	8240002959		0,9
630	630	630	630	8240003025		0,9
710	710	710	710	8240003091		0,9

QF Y-Branch(Breeches)

Ø A mm	Ø B mm	Ø D mm	Item no. Galv	Item no. QFS Galv	T mm
080	080	080	8240001283	8240003662	0,7
100	100	100	8240001285	8240003664	0,7
125	125	125	8240001288	8240003667	0,7
140	140	140	8240001292	8240003671	0,7
150	150	150	8240001297	8240003676	0,7
160	160	160	8240001303	8240003682	0,7
180	180	180	8240001310	8240003689	0,7
200	200	200	8240001318	8240003697	0,7
224	224	224	8240001327	8240003706	0,7
250	250	250	8240001337	8240003716	0,7
300	300	300	8240001347	8240003726	0,7
315	315	315	8240001358	8240003737	0,7
350	350	350	8240001369	8240003748	0,7
400	400	400	8240001381	8240003760	0,9
450	450	450	8240001393		0,9
500	500	500	8240001405		0,9
560	560	560	8240001416		0,9
630	630	630	8240001427		0,9
710	710	710	8240001438		0,9

For Y-Branches with other end dimensions, order by description or visit our website for current item codes

ORDER EXAMPLE:
Branch Y Galv 0,7mm 100QF 100QF 100QF 60Deg

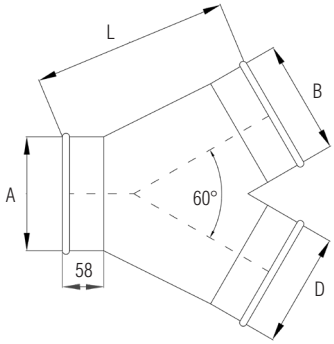

L = A + 100
B and D must be smaller than or equal to A

ORDER EXAMPLE:
Branch Tee Galv 0,7mm 80QF 80QF

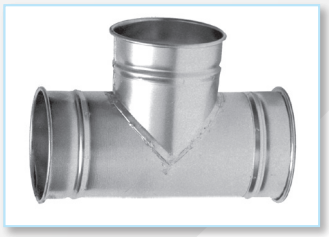

For T-Branches with other end dimensions, order by description or visit our website for current item codes

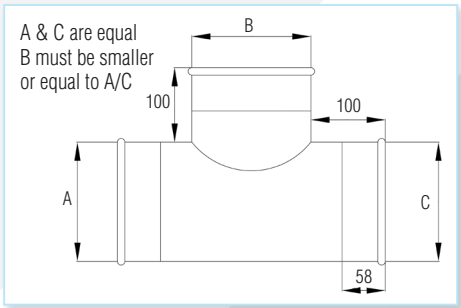

QF T-Branch

Ø A mm	Ø B mm	Item no. Galv	Item no. QFS Galv	T mm
080	080	8240004730	8240009170	0,7
100	100	8240004732	8240009172	0,7
125	125	8240004735	8240009175	0,7
140	140	8240004739	8240009179	0,7
150	150	8240004744	8240009184	0,7
160	160	8240004750	8240009190	0,7
180	180	8240004757	8240009197	0,7
200	200	8240004765	8240009205	0,7
224	224	8240004774	8240009214	0,7
250	250	8240004784	8240009224	0,7
300	300	8240004795	8240009235	0,7
315	315	8240004806	8240009246	0,7
350	350	8240004817	8240009257	0,7
400	400	8240004828	8240009268	0,9
450	450	8240004839		0,9
500	500	8240004850		0,9
560	560	8240004861		0,9
630	630	8240004872		0,9
710	710	8240004883		0,9

QF Reducer

ØA mm	ØB mm	Example Galv Item no.	Example QFS Galv Item no.	T mm	ØA mm	ØB mm	Example Galv Item no.	Example QFS Galv Item no.	T mm
100	80	8240000309	8240003092	0,7	300	200	8240000361	8240003144	0,7
125	80	8240000310	8240003093	0,7	300	250	8240000363	8240003146	0,7
125	100	8240000311	8240003094	0,7	315	300	8240000373	8240003156	0,7
140	80	8240000312	8240003093	0,7	350	300	8240000382	8240003165	0,7
140	100	8240000313	8240003096	0,7	350	315	8240000383	8240003166	0,7
140	125	8240000314	8240003097	0,7	400	300	8240000391	8240003174	0,9
150	140	8240000318	8240003101	0,7	400	315	8240000392	8240003175	0,9
160	100	8240000320	8240003103	0,7	400	350	8240000393	8240003176	0,9
160	125	8240000321	8240003104	0,7	450	400	8240000403		0,9
160	150	8240000323	8240003106	0,7	500	450	8240000413		0,9
180	160	8240000329	8240003112	0,7	560	500	8240000423		0,9
200	100	8240000331	8240003114	0,7	630	500	8240000432		0,9
200	125	8240000332	8240003115	0,7	630	560	8240000433		0,9
224	200	8240000344	8240003127	0,7	710	560	8240000442		0,9
250	200	8240000352	8240003135	0,7	710	630	8240000443		0,9
250	224	8240000353	8240003136	0,7					

ORDER EXAMPLE:
Reducer Galv 0,7mm 100QF 80QF

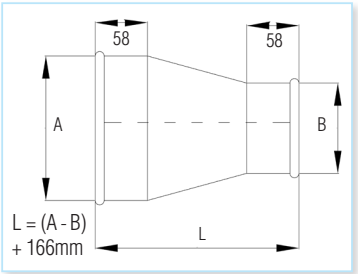

For Reducers with other end dimensions, order by description or visit our website for current item codes

QF Cut-in 30°

Ø B mm	Ø A mm	Example Galv Item no.	T mm
080	080	8240000001	0,7
100	100	8240000003	0,7
125	125	8240000006	0,7
140	140	8240000010	0,7
150	150	8240000015	0,7
160	160	8240000021	0,7
180	180	8240000028	0,7
200	200	8240000036	0,7
224	224	8240000045	0,7
250	250	8240000055	0,7
300	300	8240000066	0,7
315	315	8240000077	0,7
350	350	8240000088	0,7
400	400	8240000099	0,9
450	450	8240000110	0,9
500	500	8240000121	0,9
560	560	8240000132	0,9
630	630	8240000143	0,9
710	710	8240000154	0,9

ORDER EXAMPLE:
Cut in Galv 0,7mm 125Main 80QF 30Deg

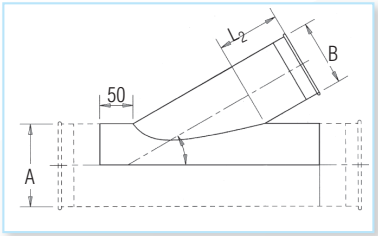

For Cut-in branches with other end dimensions, order by description or visit our website for current item codes

ORDER EXAMPLE:
Cut-In Galv 0,7mm 250 Main 180QF 90Deg

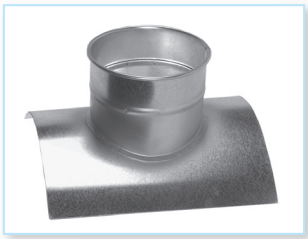

QF Cut-in 90°

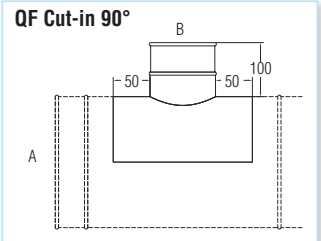

QF Cut-in 90°

Ø B mm	Ø A mm	Example Galv Item no.	T mm
080	080	8240019561	0,7
100	100	8240019563	0,7
125	125	8240019566	0,7
140	140	8240019570	0,7
150	150	8240019575	0,7
160	160	8240019581	0,7
180	180	8240019588	0,7
200	200	8240019596	0,7
224	224	8240019605	0,7
250	250	8240019615	0,7
300	300	8240019626	0,7
315	315	8240019638	0,7
350	350	8240019651	0,7
400	400	8240019665	0,9
450	450	8240019680	0,9
500	500	8240019696	0,9
560	560	8240019713	0,9
630	630	8240019731	0,9
710	710	8240019750	0,9

QF Cut-in Boot Shoe

Ø B mm	Ø A mm	Example Galv Item no.	T mm
80	80	8240000155	0,7
100	100	8240000157	0,7
125	125	8240000160	0,7
140	140	8240000164	0,7
160	160	8240000175	0,7
180	180	8240000182	0,7
200	200	8240000190	0,7
224	224	8240000199	0,7
250	250	8240000209	0,7
300	300	8240000220	0,7
315	315	8240000231	0,7
350	350	8240000242	0,7
400	400	8240000253	0,9
450	450	8240000264	0,9
500	500	8240000275	0,9
560	560	8240000286	0,9
630	630	8240000297	0,9
710	710	8240000308	0,9

ORDER EXAMPLE:
Cut-in Boot Shoe Galv 0,7mm 80 Main 80QF

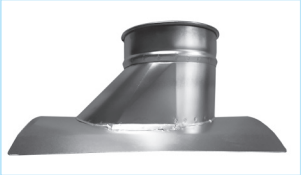

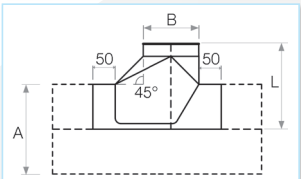

L = (A / 2) + (B / 2 + 58 mm)
The boot cut is always placed in the centre

QF Boot Shoe

Ø A mm	Ø B mm	Ø C mm	Example Galv Item no.	T mm
80	80	80	8240001439	0,7
100	100	100	8240001442	0,7
125	125	125	8240001448	0,7
140	140	140	8240001458	0,7
150	150	150	8240001473	0,7
160	160	160	8240001494	0,7
180	180	180	8240001522	0,7
200	200	200	8240001558	0,7
224	224	224	8240001603	0,7
250	250	250	8240001658	0,7
300	300	300	8240001724	0,7
315	315	315	8240001790	0,7
350	350	350	8240001856	0,7
400	400	400	8240001922	0,9
450	450	450	8240001988	0,9
500	500	500	8240002054	0,9
560	560	560	8240002120	0,9
630	630	630	8240002186	0,9
710	710	710	8240002252	0,9

ORDER EXAMPLE:
Boot Shoe Galv 0,7mm 200QF 160QF 160QF

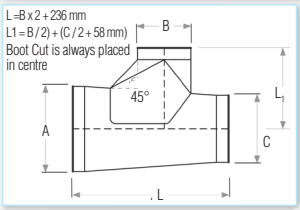

Transition from rectangular to round

ØA mm	Item no.	T mm
100	Order Transitions by description	0,9
125		0,9
140		0,9
150		0,9
160		0,9
180		0,9
200		0,9
224		0,9
250		0,9
300		0,9
315		0,9
350		0,9
400		0,9
450		0,9
500		0,9
560		0,9
610		0,9
710		0,9

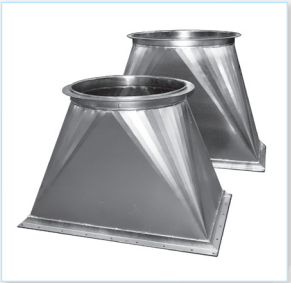

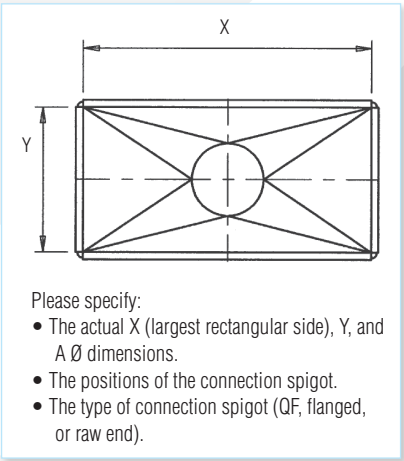

Please specify:
- The actual X (largest rectangular side), Y, and A Ø dimensions.
- The positions of the connection spigot.
- The type of connection spigot (QF, flanged, or raw end).

Custom Manifold

Please call Nordfab Ducting with your specification.

Flanged adapter (QF)

QF to FLN

ORDER EXAMPLE:
Adapter Flange Galv 0,9mm 500QF 500FLN

Ø mm	Item no. Galv	T mm
080	8210000000	0,7
100	8210000001	0,7
125	8210000002	0,7
140	8210000003	0,7
150	8210000004	0,7
160	8210000005	0,7
180	8210000006	0,7
200	8210000007	0,7
224	8210000008	0,7
250	8210000009	0,7
300	8210000010	0,7
315	8210000011	0,7
350	8210000012	0,7
400	8210000013	0,9
450	8210000014	0,9
500	8210000015	0,9
560	8210000016	0,9
630	8210000017	0,9
710	8210000018	0,9

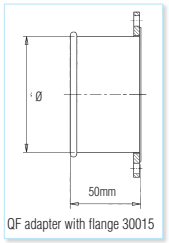

QF adapter with flange 30015

QF Hose Adapter

ORDER EXAMPLE:
Adapter Hose Galv 0,9mm 710QF

Ø mm	Item no. Galv	Item no. 304SS	T mm Galv	T mm 304SS
080	8210000019	8210003440	0,7	0,7
100	8210000020	8210003441	0,7	0,7
125	8210000021	8210003442	0,7	0,7
140	8210000022	8210003443	0,7	0,7
150	8210000023	8210003444	0,7	0,7
160	8210000024	8210003445	0,7	0,7
180	8210000025	8210003446	0,7	0,7
200	8210000026	8210003447	0,7	0,7
224	8210000027	8210003448	0,7	0,7
250	8210000028	8210003449	0,7	0,7
300	8210000029	8210003450	0,7	0,7
315	8210000030	8210003451	0,7	0,7
350	8210000031	8210003452	0,7	0,7
400	8210000032	8210003453	0,9	0,7
450	8210000033	8210003454	0,9	0,7
500	8210000034	8210003455	0,9	0,7
560	8210000035		0,9	
630	8210000036		0,9	
710	8210000037		0,9	

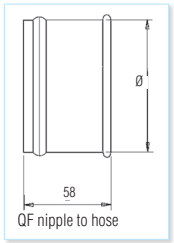

QF nipple to hose

Ø A mm	Ø B mm	Item no. Galv	T mm
080	050	8210001837	0,7
100	050	8210001838	0,7
125	075	8210001839	0,7
140	075	8210001840	0,7
150	075	8210001841	0,7
160	075	8210001842	0,7
180	075	8210001843	0,7
200	100	8210001844	0,7
224	150	8210001845	0,7
250	150	8210001846	0,7
300	215	8210001847	0,7
315	200	8210001848	0,9
400	250	8210001849	0,9
450	300	8210001850	0,9
500	350	8210001851	0,9
560	400	8210001852	0,9
600	400	8210001853	0,9
630	450	8210001854	0,9

Regulation Cone

ORDER EXAMPLE:
Regulation Cone Galv 0,9mm 315mm 200mm

ORDER EXAMPLE:
Adapter Rivet Galv 0,9mm 450QF

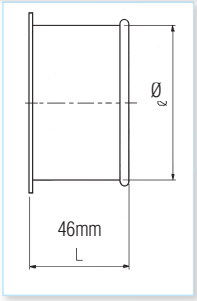

QF Tabular Rivet Adapter

Ø mm	Item no. Galv	T mm
080	8210000049	0,7
100	8210000050	0,7
125	8210000051	0,7
140	8210000052	0,7
150	8210000053	0,7
160	8210000054	0,7
180	8210000055	0,7
200	8210000056	0,7
224	8210000057	0,7
250	8210000058	0,7
300	8210000059	0,7
315	8210000060	0,7
350	8210000061	0,7
400	8210000062	0,9
450	8210000063	0,9
500	8210000064	0,9
560	8210000065	0,9
630	8210000066	0,9
710	8210000067	0,9

Ø mm	Item no. Galv	Item no. 304SS	Item no. QFS Galv	T mm Galv	T mm 304SS
080	8210000106	8210003456	8210000125	0,7	0,7
100	8210000107	8210003457	8210000126	0,7	0,7
125	8210000108	8210003458	8210000127	0,7	0,7
140	8210000109	8210003459	8210000128	0,7	0,7
150	8210000110	8210003460	8210000129	0,7	0,7
160	8210000111	8210003461	8210000130	0,7	0,7
180	8210000112	8210003462	8210000131	0,7	0,7
200	8210000113	8210003463	8210000132	0,7	0,7
224	8210000114	8210003464	8210000133	0,7	0,7
250	8210000115	8210003465	8210000134	0,7	0,7
300	8210000116	8210003466	8210000135	0,7	0,7
315	8210000117	8210003467	8210000136	0,7	0,7
350	8210000118	8210003468	8210000137	0,7	0,7
400	8210000119	8210003469	8210000138	0,9	0,7
450	8210000120	8210003470		0,9	0,7
500	8210000121	8210003471		0,9	0,7
560	8210000122			0,9	
630	8210000123			0,9	
710	8210000124			0,9	

QF Ventilation Adapter

ORDER EXAMPLE:
Adapter Ventilation Galv 0,7mm 315QF 315SP

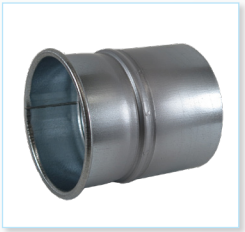

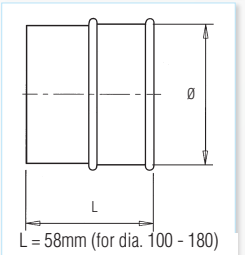

L = 58mm (for dia. 100 - 180)
L = 116mm (for dia. 200 - 500)

QF Mesh End Cap

Ø mm	Item no.	T mm	Weight kg
080	8210001031	0,7	0,15
100	8210001032	0,7	0,17
125	8210001033	0,7	0,20
140	8210001034	0,7	0,22
150	8210001035	0,7	0,23
160	8210001036	0,7	0,24
180	8210001037	0,7	0,28
200	8210001038	0,7	0,30
224	8210001039	0,7	0,33
250	8210001040	0,7	0,37
300	8210001041	0,7	0,44
315	8210001042	0,7	0,46
350	8210001043	0,7	0,51
400	8210001044	0,9	0,73
450	8210001045	0,9	0,82
500	8210001046	0,9	0,92
560	8210001047	0,9	1,02
630	8210001048	0,9	1,16
710	8210001049	0,9	1,30

ORDER EXAMPLE:
End Cap Mesh Galv 0,9mm
400QF

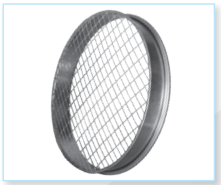

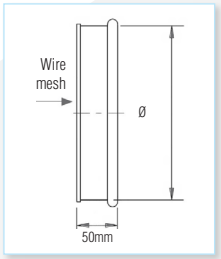

QF End Cap

Ø mm	Item no. Galv	Item no. 304SS	T mm	Weight kg
080	8210001012	8210001050	0,7	0,09
100	8210001013	8210001051	0,7	0,13
125	8210001014	8210001052	0,7	0,18
140	8210001015	8210001053	0,7	0,22
150	8210001016	8210001054	0,7	0,24
160	8210001017	8210001055	0,7	0,26
180	8210001018	8210001056	0,7	0,35
200	8210001019	8210001057	0,7	0,40
224	8210001020	8210001058	0,7	0,49
250	8210001021	8210001059	0,7	0,62
300	8210001022	8210001060	0,7	0,88
315	8210001023	8210001061	0,7	1,15
350	8210001024	8210001062	0,7	1,60
400	8210001025	8210001063	0,9	2,12
450	8210001026		0,9	2,63
500	8210001027		0,9	3,20
560	8210001028		0,9	3,86
630	8210001029		0,9	4,00
710	8210001030		0,9	4,54

ORDER EXAMPLE:
End Cap Galv 0,7mm
315QF

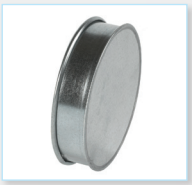

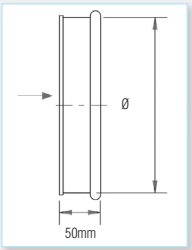

QF Machine Adapter Expanded

Ø mm	Item no. Galv	Item no. QFS Galv	T mm
080	8210001855	8210000038	0,7
100	8210001856	8210000039	0,7
125	8210001857	8210000040	0,7
140	8210001858	8210000041	0,7
150	8210001859	8210000042	0,7
160	8210001860	8210000043	0,7
180	8210001861	8210000044	0,7
200	8210001862	8210000045	0,7
224	8210001863	8210000046	0,7
250	8210001864	8210000047	0,7
300	8210001865	8210000048	0,7

ORDER EXAMPLE:
Adapter Machine Expanded Galv
0,7mm 224QF L=0,3m

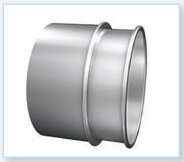

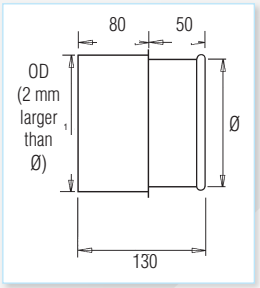

QF to FB Transition piece

Ø mm	Item no. Galv	T mm
080	8210001820	0,7
100	8210001821	0,7
125	8210001822	0,7
140	8210001823	0,7
150	8210001824	0,7
160	8210001825	0,7
180	8210001826	0,7
200	8210001827	0,7
224	8210001828	0,7
250	8210001829	0,7
300	8210001830	0,7
315	8210001831	0,7
350	8210001832	0,7
400	8210001833	0,9
450	8210001834	0,9
500	8210001835	0,9
630	8210001836	0,9

ORDER EXAMPLE:
Adapter Nipple QF to FB Galv
0,9mm 630QF 630FB

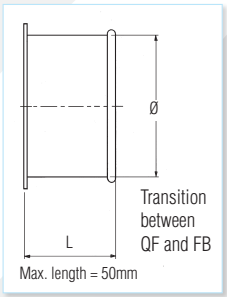

SSAA Slide Gate, Manual

Ø mm	Item no. Galv	T mm	Weight kg
080	8210004736	0,9	1,05
100	8210004737	0,9	1,50
125	8210004738	0,9	1,80
140	8210004739	0,9	2,35
150	8210004740	0,9	2,75
160	8210004741	0,9	3,25
180	8210004742	0,9	3,80
200	8210004743	0,9	3,90
225	8210004744	0,9	4,40
250	8210004745	0,9	5,00
300	8210004746	0,9	6,20
315	8210004747	0,9	7,30
350	8210004748	0,9	7,30
400	8210004749	0,9	8,80

ORDER EXAMPLE:
Damper Manual SSAA Galv 250QF

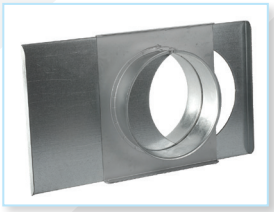

Hand-operated knife gate.
Manufactured from galvanised sheet metal 0.9 to 2.0 mm.

Overall height 130 mm.

QF Regulating Damper

Ø mm	Item no. Galv	Item no. 304SS	T mm	Weight kg
080	8210000812	8210003488	0,6	0,7
100	8210000813	8210003489	0,6	0,75
125	8210000814	8210003490	0,6	0,95
150	8210000815		0,6	1,25
160	8210000816	8210003491	0,6	1,35
180	8210000817		0,6	1,90
200	8210000818	8210003492	0,6	2,20
224	8210000819		0,6	2,25
250	8210000820	8210003493	0,6	3,05
300	8210000821	8210003494	0,6	4,20
315	8210000822	8210003495	0,6	4,30
350	8210000823	8210003496	0,6	4,77
400	8210000824	8210003497	0,7	5,50
450	8210000825	8210003498	0,7	7,45
500	8210000826		0,7	9,05

ORDER EXAMPLE:
Damper Regulating
Galv 0,7mm 100QF

SBMS Manual Damper

Ø mm	Item no. Galv	A mm	B mm	C mm	D mm	E mm	Wt kg
80	8210000784	397	197	133	185	254	3,0
100	8210000785	509	217	133	220	289	3,0
125	8210000786	564	242	133	248	316	3,5
140	8210000787	619	257	133	275	344	4,0
150	8210000788	629	267	133	280	349	4,0
160	8210000789	679	227	133	305	374	4,5
180	8210000790	739	297	133	335	404	5,0
200	8210000791	799	317	133	365	434	6,0
224	8210000792	883	341	133	407	476	6,5
250	8210000793	949	367	133	440	509	7,5
300	8210000794	1099	417	133	515	584	9,5
315	8210000795	1144	432	133	538	606	10,0
350	8210000796	1279	467	133	605	674	11,5
400	8210000797	1429	517	133	680	749	14,0

ORDER EXAMPLE:
Damper Manual SBMS Galv 315QF/FB

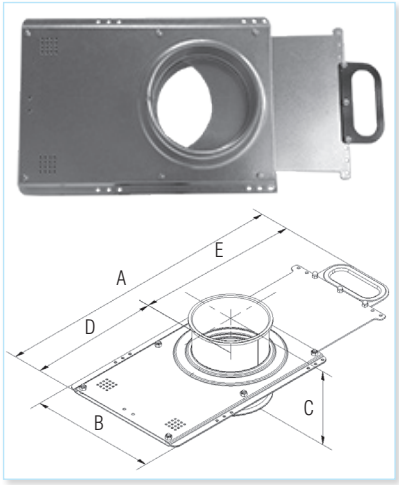

The SBMS type energy saving damper is a manually operated blast gate or sliding damper.

SBAS Automatic Damper

Ø mm	Item no. Galv	A mm	B mm	C mm	D mm	E mm	Wt kg	No. of Cylinders	Item no. for Optional Cover Plate	Item no. for Optional Auto Kit
80	8210002032	397	197	133	185	212	4,0	1	8210001991	8210002007
100	8210002033	467	217	133	220	247	4,0	1	8210001992	8210002008
125	8210002034	522	242	133	248	251	4,5	1	8210001993	8210002009
140	8210002035	577	257	133	275	274	5,5	1	8210001994	8210002010
150	8210002036	587	267	133	280	307	6,0	1	8210001995	8210002011
160	8210002037	637	227	133	305	332	6,0	1	8210001996	8210002012
180	8210002038	697	297	133	335	362	7,0	1	8210001997	8210002013
200	8210002039	757	317	133	365	392	7,0	1	8210001998	8210002014
224	8210002040	841	341	133	407	434	7,5	1	8210001999	8210002015
250	8210002041	907	367	133	440	467	8,0	2	8210002000	8210002016
300	8210002042	1057	417	133	515	542	12,0	2	8210002001	8210002017
315	8210002043	1102	432	133	538	564	12,5	2	8210002002	8210002018
350	8210002044	1237	467	133	605	632	14,0	2	8210002003	8210002019
400	8210002045	1387	517	133	680	707	16,5	2	8210002004	8210002020

ORDER EXAMPLE:
Damper Auto SBAS Galv 224QF/FB 230VAC

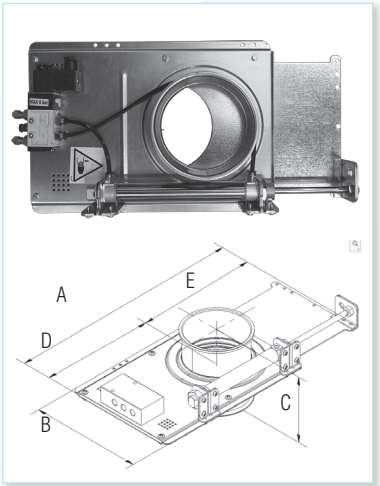

The SBAS energy saving damper is an automatic blast gate driven by double acting compressed air cylinders.

- The damper should be connected to clean and dry compressed air
- Working pressure 6 – 8 bar
- Maximum temperature 75°C
- Voltage: 230V AC (Coils for 24-48-110 V AC & DC optional)

Optional accessories	Item no.
Reed Relay (Kit includes 2 relays with attachments)	8210002005
Microswitch	8210001605
Coil 230VAC G80-B-810	8210001600
Coil 230VAC Atex Zone 22	8210001601
Coil 24VAC EX II 3D	8210001602
Coil 24VAC 4W, G80-B-340	8210001603
Coil 24VDC 2.5W G80-B-330 NFES	8210000764
Coil 120VAC 7.5W	8210001604

Reed Relay

Microswitch

Shield Cover Plate

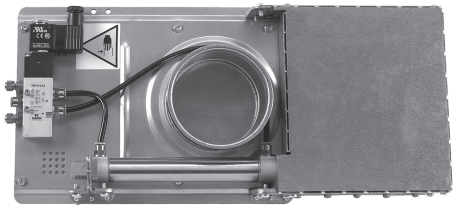

SBBA Manual Damper

The SBBA is a circular slide damper for tight closure. In the closed position, the damper is airtight and silent. Since there is no damper blade in the air stream in the open position, the damper is suitable for use in systems for dustladen air. The damper is used for closing extraction points on machinery and in workplaces not currently in use.

ORDER EXAMPLE:
Damper Manual SBBA Galv 225QF

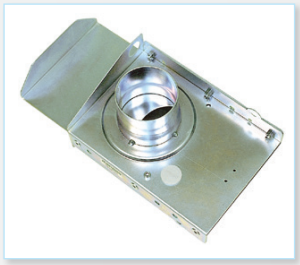

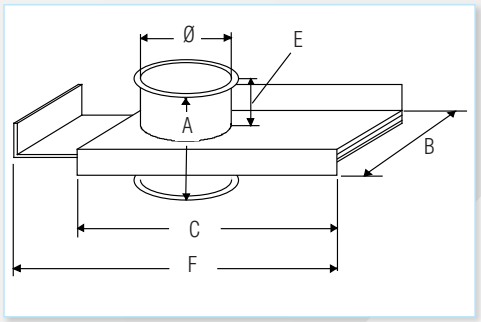

Ø mm	Item no. Galv	Item no. 304SS	A mm	B mm	C mm	E mm	F mm	Weight kg
80	8210004532	8210003599	125	160	295	60	345	2,7
100	8210004533	8210003600	125	180	285	60	405	3,0
125	8210004534	8210003601	125	205	345	60	480	3,6
140	8210004535	8210003602	125	230	395	60	555	4,5
150	8210004536	8210003603	125	230	395	60	555	4,5
160	8210004537	8210003604	125	240	415	60	585	4,7
180	8210004538	8210003605	125	280	495	60	705	5,6
200	8210004539	8210003606	125	280	495	60	705	5,6
225	8210004540	8210003607	165	345	595	77	855	10,2
250	8210004541	8210003608	165	370	595	77	855	12,2
300	8210004542	8210003609	165	420	725	77	1050	18,1
315	8210004543	8210003610	165	435	725	77	1050	19,0
350	8210004544	8210003611	165	470	795	77	1155	22,5
400	8210004545	8210003612	165	520	895	77	1305	26,1

SBBB Automatic Damper

The SBBB is a circular compressed air powered automatic slide damper for rapid and tight closure. Since the damper is opened and closed automatically, extraction is always focused on the connections, extraction points, or machines currently in operation. This maximises extraction power, with lower energy consumption as a bonus.

ORDER EXAMPLE:
Damper Automatic SBBB Galv 315QF 230VAC

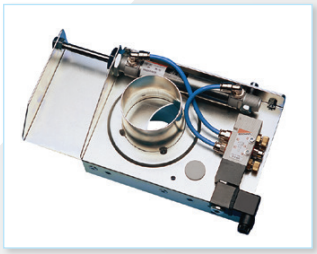

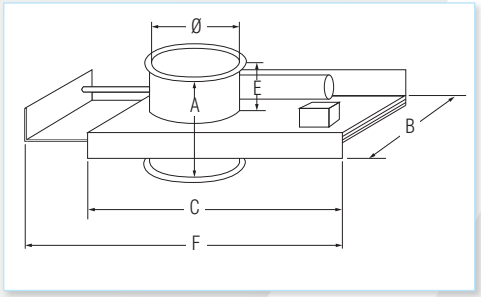

Ø mm	Item no. Galv	Item no. 304SS	A mm	B mm	C mm	E mm	F mm	Weight kg
80	8210004628	8210003613	125	160	225	55	250	3,0
100	8210004629	8210003614	125	180	265	55	290	3,3
125	8210004630	8210003615	125	205	315	55	340	4,0
140	8210004631	8210003616	125	230	365	55	390	5,0
150	8210004632	8210003617	125	230	365	55	390	5,0
160	8210004633	8210003618	125	240	385	55	410	5,2
180	8210004634	8210003619	125	280	465	55	490	6,2
200	8210004635	8210003620	125	280	465	55	490	6,2
225	8210004636	8210003621	165	345	565	77	585	11,3
250	8210004637	8210003622	165	370	565	77	585	13,5
300	8210004638	8210003623	165	420	695	77	730	20,1
315	8210004639	8210003624	165	435	695	77	730	21,1
350	8210004640	8210003625	165	470	765	77	800	25,0
400	8210004641	8210003626	165	520	865	77	905	29,0

- The damper should be connected to clean and dry compressed air
- Working pressure 5 to 8 bar
- Maximum temperature 80° C
- Voltage: 230 V AC (Coils for 24-110 V AC & DC optional, see website for item numbers)
- ATEX coil and solenoid optional

Oil Mist Drain

Ø mm	Item no. Galv	A mm	B mm	Baffle Size mm	T mm
80	8210001134	385	450	370 x 240	0,9
100	8210001135	385	450	370 x 240	0,9
125	8210001136	385	450	370 x 240	0,9
140	8210001137	385	450	370 x 240	0,9
150	8210001138	385	450	370 x 240	0,9
160	8210001139	525	600	513 x 385	0,9
180	8210001140	525	600	513 x 385	0,9
200	8210001141	525	600	513 x 385	0,9
224	8210001142	525	600	513 x 385	0,9
250	8210001143	525	600	513 x 385	0,9
300	8210001144	635	700	625 x 488	0,9
315	8210001145	635	700	625 x 488	0,9
350	8210001146	635	700	625 x 488	0,9
400	8210001147	635	700	625 x 488	0,9

ORDER EXAMPLE:
Oil Mist Drain QFS
Galv 0,9mm 160QF

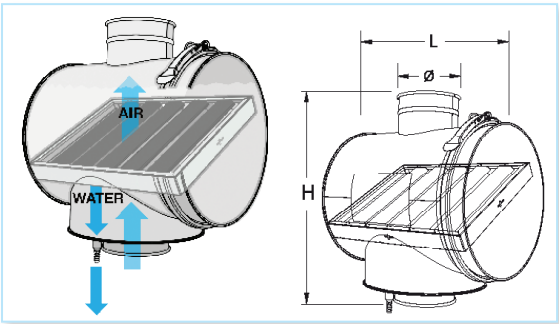

QFS Manual Damper

Ø mm	Item no.	A mm	B mm	Weight kg
100	8210000805	185	250	6
160	8210003389	385	290	7
200	8210000807	185	340	9
250	8210000808	185	390	10
300	8210000809	185	440	10
350	8210000810	485	440	11,5
400	8210000811	485	440	11,5

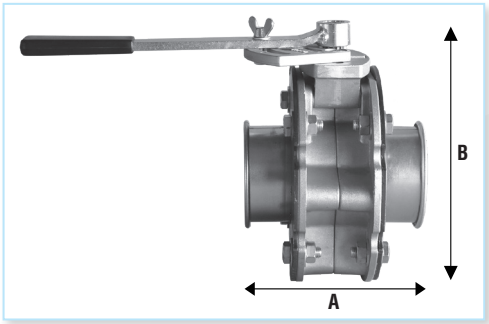

ORDER EXAMPLE:
Damper QFS Manual 350QF

QFS Automatic Damper

Ø mm	Item no.	A mm	B mm	Weight kg
100	8210000798	185	390	7,5
160	8210003390	385	430	8,5
200	8210000800	185	480	10,5
250	8210000801	185	530	11,5
300	8210000802	185	580	11,5
350	8210000803	485	580	13
400	8210000804	485	580	13

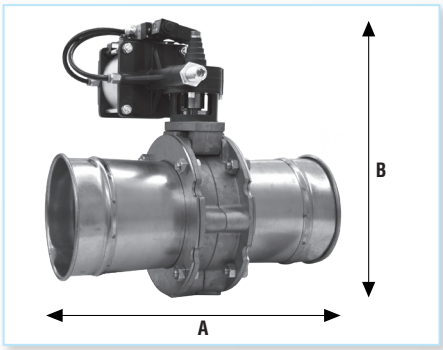

ORDER EXAMPLE:
Damper QFS Automatic 160QF

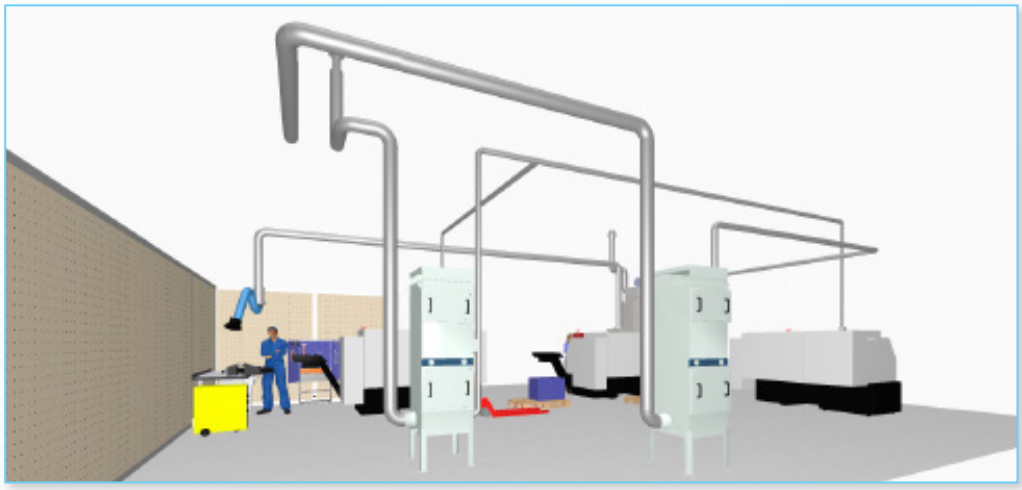

Manual & Automatic Diverter Valves

Designed for quick changes between two streams and ideal for conveying dust particulate, our diverters meet EU's machinery directive (98/37/EC) and as standard are manufactured in 2 and 3 mm painted mild steel.

RGSM

RGBM

RGSL

RGBL

Operation

- The damper should be connected to clean and dry compressed air
- Normal working pressure: 0.6 MPa (6 bar)
- Maximum pressure: 1.0 MPa (10 bar)
- Temp. range: 80° C (dry air 20° C)

Finish

- RAL5010 blue

RGSM Manual Diverter / RGBM Automatic Diverter

Ø mm	RGSM Item No.	RGBM Item No.	L mm	X mm	Y mm	Damper blade thickness	Weight RGSM	Weight RGBM
125	8210000842	8210000827	400	110	110	4	3,2	7,3
150	8210000844	8210000829	495	145	145	5	4,6	9,0
160	8210000845	8210000830	495	145	145	5	4,7	9,2
180	8210000846	8210000831	560	145	145	5	8,4	12,9
200	8210000847	8210000832	560	145	145	5	8,5	13,5
250	8210000849	8210000834	855	250	250	5	14,1	19,1
300	8210000850	8210000835	940	250	250	5	19,2	24,2
350	8210000852	8210000837	1000	250	250	6	23,9	28,9
400	8210000853	8210000838	1070	295	295	6	36,5	42,5
450	8210000854	8210000839	1125	295	295	6	40,8	46,7
500	8210000855	8210000840	1315	295	295	6	53,6	59,7

ORDER EXAMPLE:
Diverter RGSM Manual MS 2 and 3mm
350QF 45Deg RAL 5010

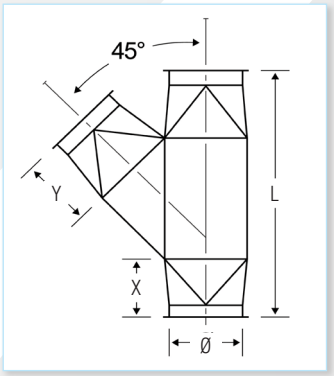

RGSL Manual Diverter / RGBL Automatic Diverter

Ø A mm	RGSL Item No.	RGBL Item No.	L mm	X mm	Y mm	Damper blade thickness	Weight RGSL	Weight RGBL
125	8210000870	8210000856	330	110	110	4	3,2	7,2
150	8210000872	8210000858	455	145	145	5	4,6	9,0
160	8210000873	8210000859	455	145	145	5	4,7	9,1
180	8210000874	8210000860	525	145	145	5	8,4	12,9
200	8210000875	8210000861	525	145	145	5	8,5	13,4
250	8210000877	8210000863	820	250	250	5	14,1	19,1
300	8210000878	8210000864	900	250	250	5	19,1	24,2
350	8210000880	8210000866	880	250	250	6	23,9	28,9
400	8210000881	8210000867	930	295	295	6	36,4	42,5
450	8210000882	8210000868	965	295	295	6	40,8	46,8
500	8210000883	8210000869	1040	295	295	6	53,6	59,7

ORDER EXAMPLE:
Diverter Y RGBL Automatic MS 2 and 3mm
200QF 60Deg RAL 5010

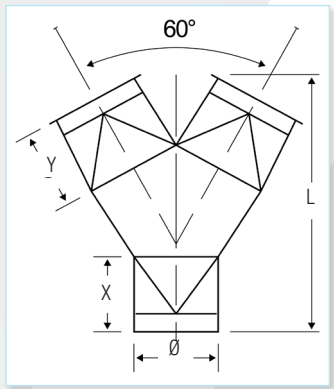

Hose

Polyurethane hose with embedded steel helix.
T = either 0, 4 or 0,7 mm.

Available in 5 or 10 meter lengths

PU4		
Inside Ø mm	Item no.	L m
051	40375956	5
051	40375957	10
063	40375958	5
063	40375959	10
076	40375960	5
076	40375961	10
082	40375962	5
082	40375963	10
102	40375964	5
102	40375965	10
127	40375966	5
127	40375967	10
152	40375968	5
152	40375969	10
165	40375970	5
165	40375971	10
182	40375972	5
182	40375973	10
203	40375974	5
203	40375975	10
229	40375976	5
229	40375977	10
254	40375978	5
254	40375979	10
305	40375980	5
305	40375981	10

PU7		
Inside Ø mm	Item no.	L m
051	40375983	5
051	40375984	10
063	40375985	5
063	40375986	10
076	40375987	5
076	40375988	10
082	40375989	5
082	40375990	10
102	40375991	5
102	40375992	10
127	40375993	5
127	40375994	10
152	40375995	5
152	40375996	10
165	40375997	5
165	40375998	10
182	40375999	5
182	40376000	10
203	40376001	5
203	40376002	10
229	40376003	5
229	40376004	10
254	40376005	5
254	40376006	10
305	40376007	5
305	40376008	10

ORDER EXAMPLE:
Hose Polyurethane 51mm L=5m PU4

Hose Clamp

ORDER EXAMPLE:
Hose Clamp Galv 175mm 205mm

Ø mm	Item no.
50-65	8210002073
58-75	8210002074
68-85	8210002075
77-95	8210002076
87-112	8210002077
104-138	8210002078
130-165	8210002079
150-180	8210002080
175-205	8210002081
200-231	8210002082
226-256	8210002083
251-282	8210002084
277-307	8210002085

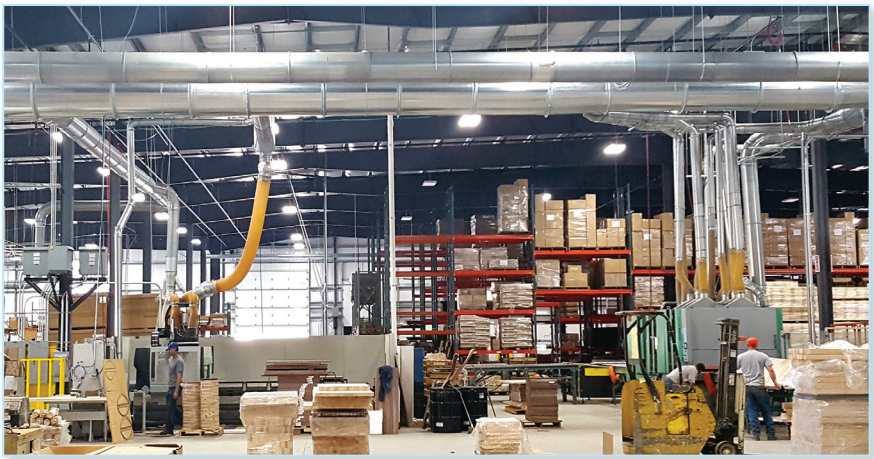

Jet Cowl

Ø mm	Item no. QF Galv	Item no. FLN Galv	W	L mm	T mm QF	T mm FLN	Weight kg
100	8210001866	8210001400	160	300	0,7	0,9	1,3
125	8210001867	8210001401	200	350	0,7	0,9	1,8
140	8210001868	8210001402	226	380	0,7	0,9	2,2
150	8210001869	8210001403	242	400	0,7	0,9	2,4
160	8210001870	8210001404	256	420	0,7	0,9	2,7
180	8210001871	8210001967	290	460	0,7	0,7	3,3
200	8210001872	8210001968	322	500	0,7	0,7	3,9
250	8210001873	8210001969	401	600	0,7	0,7	6,1
315	8210001874	8210001970	506	720	0,7	0,7	9,0
350	8210001875	8210001971	564	800	0,9	0,9	11,0
400	8210001876	8210001972	644	900	0,9	0,9	14,0
450	8210001877	8210001973	724	1000	0,9	0,9	17,4
500	8210001878	8210001974	804	1100	0,9	0,9	21,1
560	8210001879	8210001975	902	1220	0,9	0,9	26,0
630	8210001880	8210001976	1014	1360	0,9	0,9	40,0
710	8210001881	8210001977	1144	1520	0,9	0,9	49,0

ORDER EXAMPLE:
Jet Cowl Galv 0,9mm 450QF

ORDER EXAMPLE:
Ball Joint Galv 1,0mm 300QF

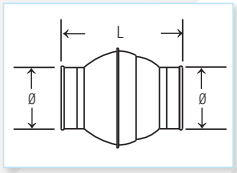

QF Ball Joint

Ø mm	Item no. Galv	L mm	T mm	Weight kg
100	8210002216	280	1,0	1,00
125	8210002217	295		1,25
150	8210002218	315		1,60
200	8210002220	360		2,55
250	8210002222	350		2,80
300	8210002223	420		3,70

Weather Cowl

Supplied in flanged design.

Ø mm	Item no. Galv	B mm	C mm	T mm	Weight kg
125	8210001883	250	150	0,9	1,50
140	8210001884	350	190	0,9	1,90
160	8210001885	350	190	0,9	2,10
180	8210001886	400	220	0,9	2,50
200	8210001887	400	220	0,9	2,55
250	8210001888	500	240	0,9	3,00
315	8210001889	650	340	0,9	5,30
350	8210001890	650	340	0,9	5,90
400	8210001891	750	371	0,9	8,10
450	8210001892	750	370	0,9	8,20
500	8210001893	950	440	0,9	9,90

ORDER EXAMPLE:
Weather Cowl Galv 0,9mm 350QF

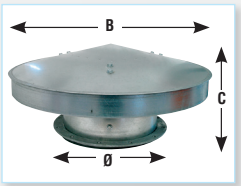

Floor Sweep

Ø mm	Item no. Galv	A mm	B mm	C mm	L mm	Weight kg
080	8210001097	150	300	75	450	0,6
100	8210001098	150	300	75	450	1,0
125	8210001099	150	300	75	450	2,0
140	8210001100	150	300	75	450	2,9
150	8210001101	150	300	75	450	3,4
160	8210001102	150	300	75	450	3,8
180	8210001103	150	300	75	450	4,9
200	8210001104	150	300	75	450	5,9
224	8210001105	150	300	75	450	6,9
250	8210001106	150	300	75	450	8,3
300	8210001107	150	300	75	450	10,7

ORDER EXAMPLE:
Floor Sweep Galv 160QF/FB

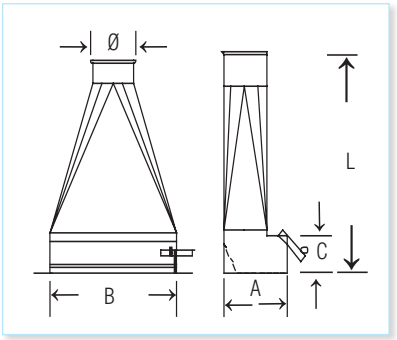

Sputnik – Suction Hood

No. of Connections	Example Item no. Galv	T mm
2	8210001894	0,7
3	8210001895	0,7
4	8210001896	0,7
5	8210001897	0,7
6	8210001898	0,7
7	8210001899	0,9
8	8210001900	0,9

ORDER EXAMPLE:
Sputnik-Suction Hood Galv 160QF (add all other diameters and end types ex. 4 X 100 Ø2 200 ØA)

- No. of connections (X is from 2 to 8) and shape (round or rectangular) must be specified
- Ø2 edge type must be specified (example: hose connection
- Available in diameters 100 - 710

For suction hoods with other end dimensions, order by description or visit our website for current item codes

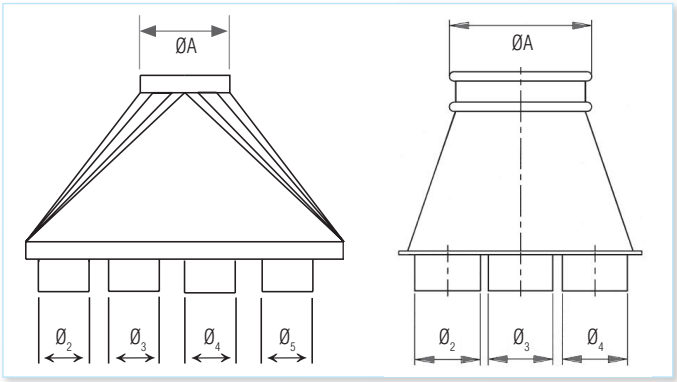

QF Drop Out Box

Ø mm	Item no. Galv	L mm	H mm
160	8210001915	480	495
200	8210001916	600	575
250	8210001917	750	675
315	8210001918	945	805
350	8210001919	1050	875
400	8210001920	1200	975
450	8210001921	1350	1075
500	8210001922	1500	1175
560	8210001923	1500	1295

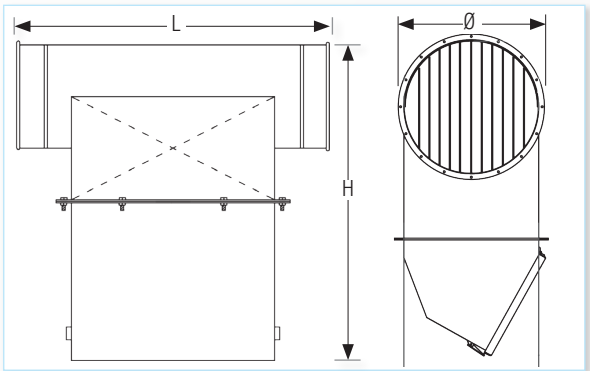

The Drop Out Box stops large wood chips in the airstream. Inside the duct, deflectors knock chips downward into the built in hopper.

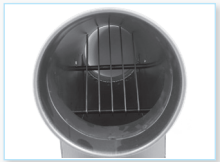

ORDER EXAMPLE:
Drop Out Box Galv 500QF

QF Silencer

ORDER EXAMPLE:
Silencer w/o Baffle Galv 160QF L=0,5m

Ø mm	Item no. w/o Baffle L=0,5m	Item no. w/o Baffle L=1m	Item no. w/o Baffle L=2m	OD mm
100	8210001508	8210001509		300
125	8210003720	8210003721		325
140	8210003722	8210001512		340
150	8210001514	8210003723	8210001515	350
160	8210003724	8210003725	8210001516	360
180	8210001517	8210001518	8210001519	380
200	8210001520	8210003726	8210001521	400
225	8210001522	8210003727	8210001523	424
250	8210001524	8210003728	8210001525	450
300	8210001526	8210003729	8210001527	500
315	8210001528	8210003730	8210001529	515
350	8210001530	8210003731	8210001531	550
400	8210001532	8210003732	8210001533	600
450	8210001534	8210003733	8210001535	650
500	8210001536	8210003734	8210001537	700
560	8210001538	8210003735	8210001539	760
630	8210001540	8210003736	8210003737	830
710	8210001541	8210001542	8210001543	910

Ø mm	Item no. w/ Baffle L=0,5m	Item no. w/ Baffle L=1m	Item no. w/ Baffle L=2m	OD mm
300	8210001446	8210003679	8210001447	500
315	8210001448	8210003680	8210001449	515
350	8210001450	8210003681	8210001451	550
400	8210001452	8210003682	8210001453	600
450	8210001454	8210003683	8210001455	650
500	8210001456	8210003684	8210001457	700
560	8210001458	8210003685	8210001459	760
630	8210001460	8210003686	8210001461	830
710	8210001462	8210001463	8210003687	910

ORDER EXAMPLE:
Back Pressure Flap Valve Galv 250QF

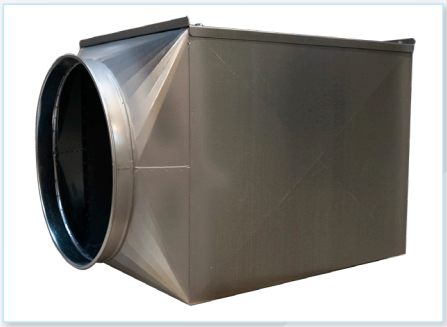

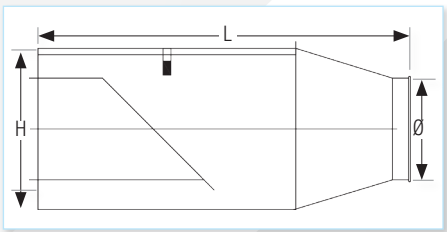

QF Back Pressure Flap Valve

Ø mm	Item no. QF Galv	H mm	L mm	Weight kg
160	8210002126	250	550	4,0
200	8210002127	300	600	6,0
250	8210002128	375	706	11,0
315	8210002129	440	771	16,5
350	8210002130	475	806	22,5
400	8210002131	525	856	31,0
450	8210002132	575	906	37,5
500	8210002133	625	956	38,0
560	8210002134	685	1116	44,5

Ø mm	Item no. FLN Galv	H mm	L mm	Weight kg
160	8210002137	250	550	5,0
200	8210002138	300	600	7,5
250	8210002139	375	706	11,0
315	8210002140	440	771	16,5
350	8210002141	475	806	22,5
400	8210002142	525	856	31,0
450	8210002143	575	906	37,5
500	8210002144	625	956	38,0
560	8210002145	685	1116	44,5

Spraywall

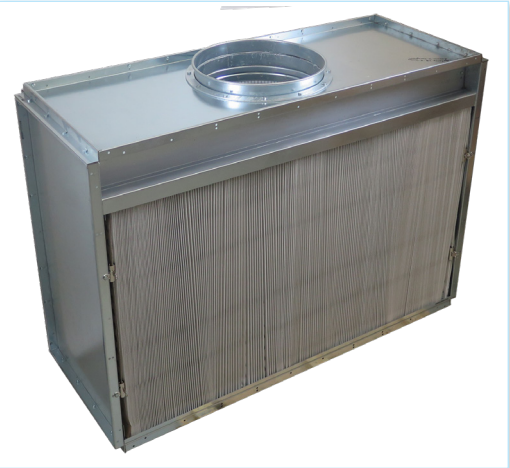

Nordfab offers two models of Spraywalls for use in spray painting applications. Both filter types are especially suited for small intensive spray painting, including all painting types, and glue, polyester, etc. Nordfab spraywalls are constructed of galvanised steel sheet metal.

Our spraywall with dry filter type AV (shown at left) is assembled with the "Andrea" disposable filter. The filtering degree is approx. 90% and the filter can absorb up to 20 kg solids per m^2.

Our spraywall with labyrinth filter type LV (shown at right) is constructed in a way that makes dismantling and cleaning easy, reducing maintenance costs for filter materials.

Advantages:

- Compact construction
- High filtering capability
- Maintainability
- Side plates as modular system (accessory)

Filter Type	Item no.	H mm	W mm	Ø mm	m3/h at 0,5 m/s in the opening	Weight kg	* Pressure loss Pa start
AV1015	8210002103	1120	1570	450	3200	100	115 / 375
AV1020	8210002104	1120	2170	450	4400	120	225 / 475
AV1025	8210002105	1120	2470	450	5000	135	250 / 500
AV1030	8210002106	1120	3070	450	6200	165	115 / 375
AV1040	8210002107	1120	4270	2 x 450	8600	205	225 / 475
AV2015	8210002108	2020	1570	2 x 450	5700	150	250 / 500
AV2020	8210002109	2020	2170	450	7900	180	500 / 750
AV2025	8210002110	2020	2470	450	9000	195	625 / 875
AV2030	8210002111	2020	3070	2 x 450	11200	245	250 / 500
AV2040	8210002112	2020	4270	2 x 450	1550	300	450 / 700
LV1515	8210002113	1570	1570	450	4000	160	225 / 475
LV1520	8210002114	1570	2170	450	5800	200	250 /500
LV2015	8210002115	2020	1570	450	5400	194	250 / 500
LV2020	8210002116	2020	2170	450	7500	225	450 / 700
LV2025	8210002117	2020	2470	450	8600	275	575 / 825
LV2030	8210002118	2020	3070	2 x 450	10700	375	250 / 500
LV2530	8210002119	2470	3070	2 x 450	13000	410	350 / 600
LV3030	8210002120	3070	3070	2 x 450	16400	440	550 / 800

* Dry filter pressure loss PA 25 / 100
* Filter basket pressure loss Pa 25 / 200

ORDER EXAMPLES:
Spraywall Dry Andrea AV 1030
Spraywall Dry Lamella Wall LV2020

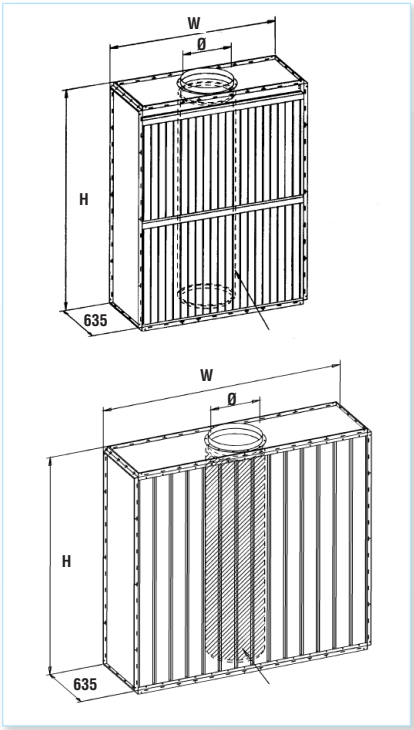

Item no.	Description
82260934	Filterbasket Dia450 L=1830 mm for spraywall type 2020
82260933	Filterbasket Dia450 L=915 mm for spraywall type 1120
8210002199	Andreafilter L=9,2m H=0.9m

If more filtering is desired, a filter basket with replaceable filter mat can be mounted in the spray wall. Hinged side plates with a width of 600 mm can be mounted on the spray wall.

Close up of the "Andrea" disposable filter included in the spraywall dry filter type AV.

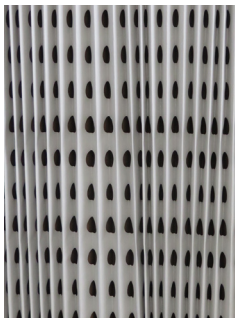

Roof Plate

Ø mm	Item no. QF Galv	Plate W /L* mm	T mm
100	8210001181	412	0,7
125	8210001182	437	0,7
140	8210001183	452	0,7
160	8210001185	472	0,7
180	8210001186	492	0,7
200	8210001187	512	0,7
250	8210001188	562	0,7
315	8210001189	627	0,7
350	8210001190	662	0,9
400	8210001191	712	0,9
450	8210001192	762	0,9
500	8210001193	812	0,9
560	8210001194	782	0,9
630	8210001195	942	0,9
710	8210001196	1022	0,9
800	8210001197	1112	0,9
900	8210001198	1212	0,9

* Base Plate is square so width and length are same

ORDER EXAMPLE:
Roof Plate Galv 0,9mm 450QF

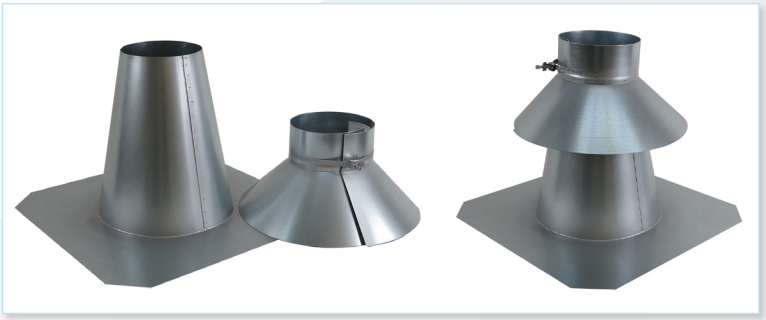

Wall Plate for Pipe

Ø mm	Item no. QF Galv	Outer Ø mm	T mm
100	8210001303	314	0,7
125	8210001304	338	0,7
140	8210001305	352	0,7
160	8210001307	372	0,7
180	8210001308	392	0,7
200	8210001309	412	0,7
250	8210001311	462	0,7
300	8210001312	512	0,7
315	8210001313	526	0,7
350	8210001314	562	0,9
400	8210001316	612	0,9
450	8210001317	662	0,9
500	8210001318	712	0,9
560	8210001319	772	0,9
630	8210001320	842	0,9
710	8210001321	922	0,9
800	8210001322	1012	0,9
900	8210001324	1112	0,9

ORDER EXAMPLE:
Wall Plate Galv 0,9mm 450QF

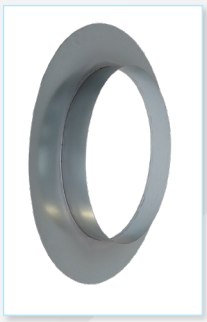

Flanged Duct FLI

Ø mm	Item no. Galv	Item no. SS	L mm	T mm Galv	T mm 304SS	Weight kg
450	8240020514	8240020869	500	0,9	2	8,8
500	8240020517	8240020872				9,6
550	8240020520	8240020875				10,6
600	8240020526	8240020878				11,5
630	8240020529	8240020881				12,1
650	8240020532	8240020884				12,9
700	8240020535	8240020887				13,4
710	8240020538					16,0
750	8240020541	8240020890				16,1
800	8240020544	8240020893				17,5
850	8240020547	8240020896				18,4
900	8240020550	8240020899				19,6
950	8240020553	8240020902				20,7
1000	8240020556	8240020905				21,7
450	8240020515	8240020870	1000	0,9	2	13,9
500	8240020518	8240020873				15,0
550	8240020521	8240020876				16,9
600	8240020527	8240020879				18,3
630	8240020530	8240020882				14,2
650	8240020533	8240020885				20,8
700	8240020536	8240020888				21,3
710	8240020539					24,5
750	8240020542	8240020891				24,8
800	8240020545	8240020894				26,5
850	8240020548	8240020897				27,8
900	8240020551	8240020900				29,8
950	8240020554	8240020903				31,5
1000	8240020557	8240020906				33,0
450	8240020516	8240020871	2000	0,9	2	23,5
500	8240020519	8240020874				26,4
550	8240020522	8240020877				29,4
600	8240020528	8240020880				31,9
630	8240020531	8240020883				28,5
650	8240020534	8240020886				34,5
700	8240020537	8240020889				37,1
710	8240020540					41,3
750	8240020543	8240020892				41,3
800	8240020546	8240020895				44,6
850	8240020549	8240020898				45,1
900	8240020552	8240020901				50,2
950	8240020555	8240020904				53,0
1000	8240020558	8240020907				55,6

ORDER EXAMPLE:
Duct L Galv 0,9mm 600FLI L=0,5m

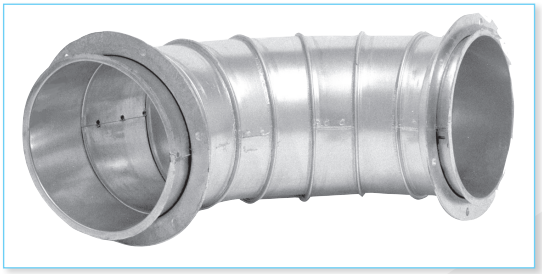

Flanged Segmented Bends

(loose flanges)
R=1,5 x diameter to centreline

Custom radiuses available on request.

ORDER EXAMPLE:
Bend Seg Galv 0,9mm 350FLI 90Deg R=1,5

90° Segmented Bends (FLI)

Ø mm	Item no. Galv	R mm	T mm	Weight kg
350	8210002565	525	0,9	8,6
400	8210002570	600	0,9	10,5
450	8210002575	675	0,9	12,8
500	8210002580	750	0,9	15,5
550	8210002585	840	0,9	23,3
630	8210002595	945	0,9	28,7
710	8210002610	1065	0,9	36,4
800	8210002620	1200	0,9	43,3
900	8210002630	1350	0,9	53,5
1000	8210002640	1500	0,9	67,9

60° Segmented Bends (FLI)

Ø mm	Item no. Galv	R mm	T mm	Weight kg
350	8210002564	525	0,9	6,7
400	8210002569	600	0,9	8,0
450	8210002574	675	0,9	9,7
500	8210002579	750	0,9	11,7
550	8210002584	840	0,9	17,0
630	8210002594	945	0,9	20,8
710	8210002609	1065	0,9	26,0
800	8210002619	1200	0,9	30,9
900	8210002629	1350	0,9	31,6
1000	8210002639	1500	0,9	38,7

45° Segmented Bends (FLI)

Ø mm	Item no. Galv	R mm	T mm	Weight kg
350	8210002563	525	0,9	5,7
400	8210002568	600	0,9	6,8
450	8210002573	675	0,9	8,2
500	8210002578	750	0,9	9,7
550	8210002583	840	0,9	13,8
630	8210002593	945	0,9	16,8
710	8210002608	1065	0,9	20,9
800	8210002618	1200	0,9	25,8
900	8210002628	1350	0,9	31,3
1000	8210002638	1500	0,9	39,3

30° Segmented Bends (FLI)

Ø mm	Item no. Galv	R mm	T mm	Weight kg
350	8210002562	525	0,9	4,7
400	8210002567	600	0,9	5,6
450	8210002572	675	0,9	6,6
500	8210002577	750	0,9	7,8
550	8210002582	840	0,9	10,7
630	8210002592	945	0,9	12,8
710	8210002607	1065	0,9	15,7
800	8210002617	1200	0,9	20,0
900	8210002627	1350	0,9	24,0
1000	8210002637	1500	0,9	29,7

15° Segmented Bends (FLI)

Ø mm	Item no. Galv	R mm	T mm	Weight kg
350	8210002561	525	0,9	4,7
400	8210002566	600	0,9	5,6
450	8210002571	675	0,9	6,6
500	8210002576	750	0,9	7,8
550	8210002581	840	0,9	10,7
630	8210002591	945	0,9	12,8
710	8210002606	1065	0,9	15,7
800	8210002616	1200	0,9	20,0
900	8210002626	1350	0,9	24,0
1000	8210002636	1500	0,9	29,7

FLN Flange

ORDER EXAMPLE:
Flange 30015 Galv 5mm 125FLN

FLN Flange Dimensions in mm										
Ø mm	Item no. Galv	Item no. MS	d	d1	D	T	W	Hole Ø	No. holes	Weight kg
80	8210001064	—	81	107	121		20		4	0,26
100	8210001065	8210002047	101	127	143		20		4	0,30
125	8210001066	8210002048	126	157	178		25		4	0,47
140	8210001067	8210002049	141	172	193		25		6	0,52
150	8210001068	—	151	182	203		25		6	0,54
160	8210001069	8210002050	161	192	213		25		6	0,58
180	8210001070	8210002051	181	212	233		25		6	0,64
200	8210001071	8210002052	203	232	253		25		6	0,71
225	8210001072	8210002053	227	257	279		25		6	0,75
250	8210001073	8210002054	253	289	313		30		6	1,06
300	8210001075	—	303	339	363		30		6	1,25
315	8210001076	8210002055	317	349	377		30		8	1,30
350	8210001077	8210002056	353	387	413		30		8	1,43
400	8210001079	8210002057	404	438	464	5	30	10	12	1,62
450	8210001080	8210002058	454	488	514		30		12	1,81
500	8210001081	8210002059	504	538	564		30		12	2,00
550	8210001082	8210002060	554	588	614		30		12	2,10
560	8210001083	8210002061	565	600	625		30		12	2,22
600	8210001084	8210002062	604	640	664		30		16	3,04
630	8210001085	8210002063	635	670	695		30		16	3,19
650	8210001086	—	654	688	714		30		16	3,28
700	8210001087	8210002064	704	738	764		30		16	3,53
710	8210001088	8210002065	715	750	775		30		16	3,62
750	8210001089	—	754	788	814		30		16	4,02
800	8210001090	8210002066	804	848	884		40		16	4,22
900	8210001091	8210002067	904	948	984		40		16	4,72
1000	8210001092	8210002068	1004	1048	1084		40		16	6,20

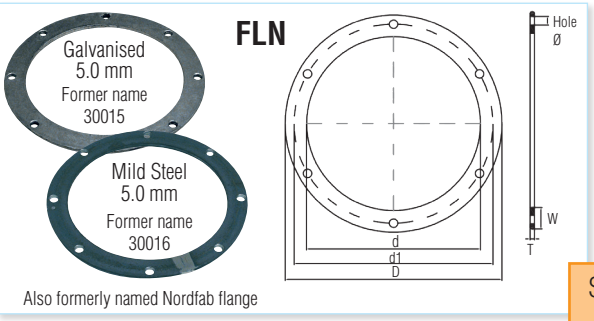

Also formerly named Nordfab flange

Specify Flange material:
Galv
MS Mild Steel
304SS

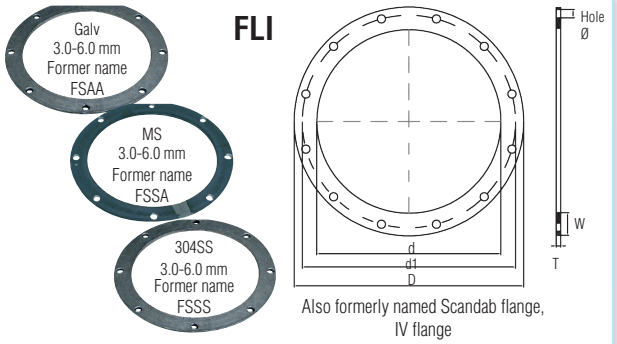

Also formerly named Scandab flange, IV flange

FLI Flange

ORDER EXAMPLE:
Flange FSAA Galv 5mm 300FLI

FLI Flange Dimensions in mm											
Ø mm	Item No. Galv	Item No. MS	Item No. 304SS	d	d1	D	T	W	Hole Ø	No. holes	Weight kg
080	8210003257	8210003190	8210003226	83	115	133	3	25	9	8	0,26
100	8210003258	8210003191	8210003227	103	135	153	3	25	9	8	0,31
120	8210003259	8210003192	8210003228	123	155	173	3	25	9	8	0,36
125	8210003260	8210003193	8210003229	128	160	18	3	25	9	8	0,38
140	8210003261	8210003194	8210003230	143	175	193	3	25	9	8	0,41
150	8210003262	8210003195	8210003231	153	185	203	5	25	9	8	0,54
160	8210003263	8210003196	8210003232	163	195	213	5	25	9	8	0,58
180	8210003264	8210003197	8210003233	183	215	233	5	25	9	8	0,64
200	8210003265	8210003198	8210003234	203	235	253	5	25	9	12	0,70
225	8210003266	8210003199	8210003235	228	260	278	5	25	9	12	0,75
250	8210003267	8210003200	8210003236	253	285	303	5	25	9	12	0,86
300	8210003269	8210003201	8210003237	304	336	354	5	25	9	12	1,00
315	8210003270	8210003202	8210003238	319	351	369	5	25	9	12	1,26
350	8210003271	8210003203	8210003239	354	389	414	6	30	11	12	1,84
400	8210003273	8210003204	8210003240	404	439	464	6	30	11	16	2,10
450	8210003274	8210003205	8210003241	454	489	515	6	30	11	16	2,32
500	8210003275	8210003206	8210003242	505	540	565	6	30	11	16	2,56
550	8210003276	8210003207	8210003243	555	590	615	6	30	11	16	2,81
600	8210003277	8210003209	8210003244	605	640	665	6	30	11	16	3,04
630	8210003278	8210003210	8210003245	635	670	695	6	30	11	24	3,19
650	8210003279	8210003211	8210003246	655	690	715	6	30	11	24	3,28
700	8210003280	8210003212	8210003247	705	740	765	6	40	11	24	3,53
710	8210003281	8210003213	—	715	750	795	6	40	11	24	3,90
750	8210003282	8210003214	8210003248	755	800	835	6	40	11	24	5,09
800	8210003283	8210003215	8210003249	805	850	885	6	40	11	24	5,41
850	8210003284	8210003216	8210003250	855	900	935	6	40	11	24	5,73
900	8210003285	8210003217	8210003251	905	950	985	6	40	11	24	6,05
950	8210003286	8210003218	8210003252	955	1000	1035	6	40	11	24	6,37
1000	8210003287	8210003219	8210003253	1005	1050	1085	6	40	11	24	6,69
1250	8210003288	8210003220	8210003254	1255	1300	1335	6	40	11	28	6,85

Flange Gasket FSAZ

Ø mm	Item No.	Ø mm	Item No.	Ø mm	Item No.
080	8210003102	250	8210003112	630	8210003122
100	8210003103	275	8210003113	650	8210003123
120	8210003104	300	8210003114	700	8210003124
125	8210003105	315	8210003115	750	8210003125
140	8210003106	350	8210003116	800	8210003126
150	8210003107	400	8210003117	850	8210003127
160	8210003108	450	8210003118	900	8210003128
180	8210003109	500	8210003119	950	8210003129
200	8210003110	550	8210003120	1000	8210003130
225	8210003111	600	8210003121	1250	8210003131

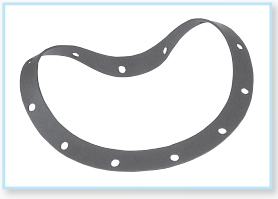

T = 3 mm, Nitrile.
Also available in other qualities.
Compatible with FSAA, FSSA, FSSS.

ORDER EXAMPLE:
Gasket Flange FSAZ Nitrile 630mm

Inline Spark Trap

Complementary Fire Prevention for your Dust Collection System

Simple, Economical Fire Protection

Installed in ducting as part of a dust collection system, the Nordfab Inline Spark Trap greatly reduces the possibility of fire in cyclones / collectors by decreasing the number of sparks which could reach the cyclone or collector through the ductwork.

The spark trap's effectiveness is based on a simple principle—disrupting the laminar airflow to cause sparks to cool and extinguish before they can enter a cyclone/ collector. There are no moving parts and no power is required for operation.

sparks visible in airstream entering trap (closeup below)

Nordfab Inline Spark Trap (shown with viewing spools on either side)

airstream exiting trap (closeup below)

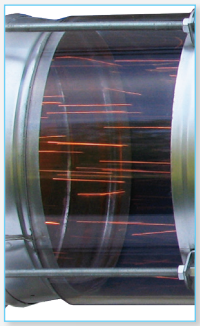

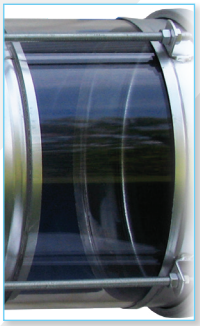

Quick, Easy Installation and Cleanout

Quick-Fit clip-together ducting eliminates rivets, screws and welding, significantly reducing the time required to install or replace ducting. The Nordfab Inline Spark Trap can quickly and easily be mounted into QuickFit ducting systems or other duct systems with use of a Nordfab adapter, and the trap can easily be removed for cleanout. Calibration or other assistance from a factory technician is not required.

Operation

- Must be mounted in a horizontal position.
- Duct distance recommended: At least ten diameters from cyclone / collector
- Velocity: 1500 5000 fpm (7.62m/sec 25.4m/sec).
- The Nordfab Inline Spark Trap is not a replacement for spark detection or explosion isolation systems. It is a complementary device only.

Ø mm	Item no. Galv	Item no. 304SS	Pressure loss in Pa at 15 m / s.	Height mm	Width mm	T mm Galv	T mm SS	Weight kg
100	8210001264	8210001252	212	180	466	0,7	0,7	2,8
125	8210001265	8210001253	212	224	504	0,7	0,7	3,2
160	8210001266	8210001254	224	280	546	0,7	0,7	3,7
200	8210001267	8210001255	274	350	606	0,7	0,7	5,0
250	8210001268	8210001256	299	400	606	0,7	0,7	5,9
315	8210001269	8210001257	336	500	676	0,7	0,7	6,8
400	8210001270	8210001258	361	630	766	0,7	0,7	7,3
450	8210001271	8210001259	299	710	826	0,9	0,9	15
500	8210001272	8210001260	311	810	926	0,9	0,9	21
560	8210001273	8210001261	300	920	1026	0,9	0,9	26
630	8210001274	8210001262	315	1020	1086	0,9	0,9	33
710	8210001275	8210001263	320	1150	1186	0,9	0,9	39

ORDER EXAMPLE:
Spark Trap InLine Galv 0,7mm 400QF

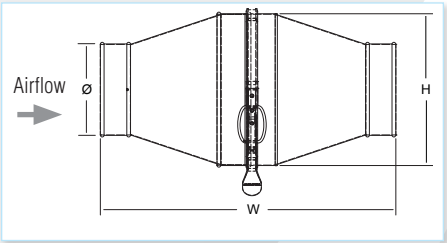

CARZ Explosion Isolation Flap Valve

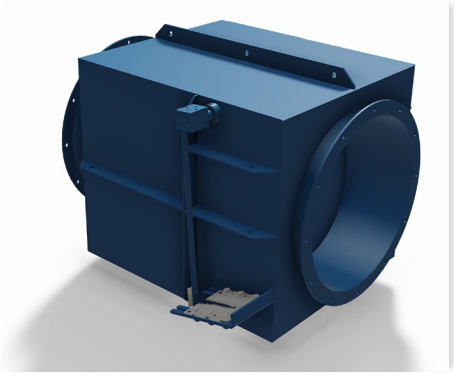

Explosion Pressure Resistance

The Explosion Isolation Flap Valve type CARZ is designed as explosion pressure resistance equipment, to prevent transmission of dangerous pressure waves and flames to upstream areas. CARZ valves are certified according to EN 16447:2014.

Description

Welded construction in RAL 5009 blue painted steel plate or optional stainless steel with optional rubber seal.

Function

Air flow generated by the main fan keeps the Flap Plate open. In case of an explosion in the downstream equipment (e.g. dust collector), a pressure wave will force the Flap Plate to close and lock in position. The closed Flap Plate provides an effective barrier against an approaching flame, preventing the explosion from being transmitted to upstream work areas.

CE 1026 Ex D St1

The marking is based on product certification:
FTZU 15 ATEX 0128X by N.B. No. 1026 and Quality System approval by N.B.

Technical Data	
Ambient temperature range	Min. -20°C to 60°C (Min 0°F, Max 140°F)
Certifications	CE, EX
Material	Welded carbon steel, painted RAL5009
Operating temperature range	Min. -20°C to 70°C (Min 0°F, Max 160°F)
Connection	QF, FLI
Kst (bar m/s)	200
Maximum reduced pressurem, Pred(bar)	0,45
Install type	Push and Pull

Ø mm	Item no. QF	Item no. FLI	A mm	B mm	C mm	D mm	E mm	F mm	G mm	H mm	Weight kg
160	73001692	73001685	495	470	435	581	196	310	130	155	23
180	73001693	73001686	515	470	455	581	206	301	140	165	26
200	73001694	73001687	535	470	475	581	216	291	150	175	29
250	73001696	73001688	585	470	525	585	241	266	175	200	36
315	73001697	73001689	650	495	605	650	273	230	213	253	45
350	73001698	73001690	685	530	640	685	291	217	225	265	50
400	73001699	73001691	735	580	690	735	316	198	250	290	57

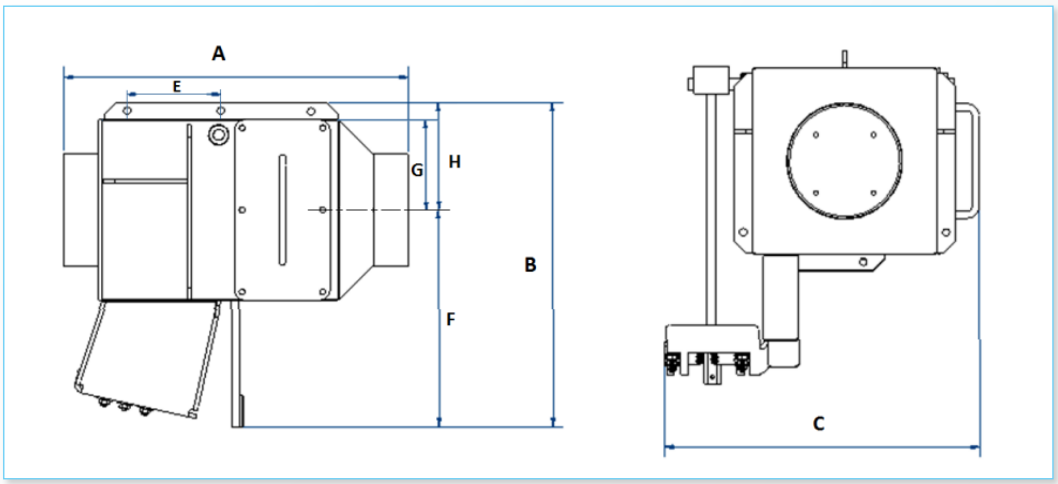

QFS Gas Damper

Explosion Resistance in Duct Systems for Oil Mist and Coolants

The QFS Gas Damper is designed to shut off upon detection of flames or smoke in the collector, to prevent explosions upstream.

Area of use

- For safe or potentially explosive area
- Max. operating pressure ±10 kPa
- Max temperature +200°
- II 2GD IIC T6 according to ATEX-directive 2014/34/EU

Technical Specification / Description

- Material AISI 316L
- For duct speeds between 8 - 15 m/s
- Butterfly type damper with a double plate
- Damper blade seal is surrounded by a strong, inflating hose seal. Tightness class 4 for blade and class D for casing according to EN1751.
- O-ring seals at engine shaft lining, tight sleeve at other shaft end
- Temperature sensor is mounted in protected plugs
- Temperature sensor initiates closing at max +180°C*.
- 2 signal contacts for indication of open/closed position. Closing time of approximately 3 seconds provides lifespan of approximately 1000 cycles. Closing time of approximately 10 seconds will provide lifespan of approximately 10,000 cycles.
- Actuator is mounted on heat-protected (radiant) actuator shelf and fitted with a shaft coupling (heat bridge). Actuator shelf is raised to provide thermal insulation after mounting of damper.
- Available actuators: Schischek 24-240 VAC/DC for "safe area" environment, with spring return for closing. Actuator is replaceable and available as a spare part.
- CE marked
- Flanged connection

Control unit for controlling damper / sensor and external closing is included.

Damper must be mounted so that the actuator unit is facing upwards and twisted approximately ±45° to protect against thermal radiation.

* If the damper is exposed to the max. temperature, e.g. in case of fire, the damper must be replaced.

Type	Ø mm	Item no. FLI	Weight kg
BRNE	160	8210005184	6,9
	200	8210005185	9,5
	250	8210005186	10,6
	315	8210005187	18,2
	400	8210005188	20,8
	500	8210005189	23,4
EXNE	160	8210005190	6,9
	200	8210005191	9,5
	250	8210005192	10,6
	315	8210005193	18,2
	400	8210005194	20,8
	500	8210005195	23,4

Nordfab Europe sales and manufacturing facility in Assens Mariager, Denmark.

Left: Nordfab UK sales and manufacturing facility in Leeds, England.

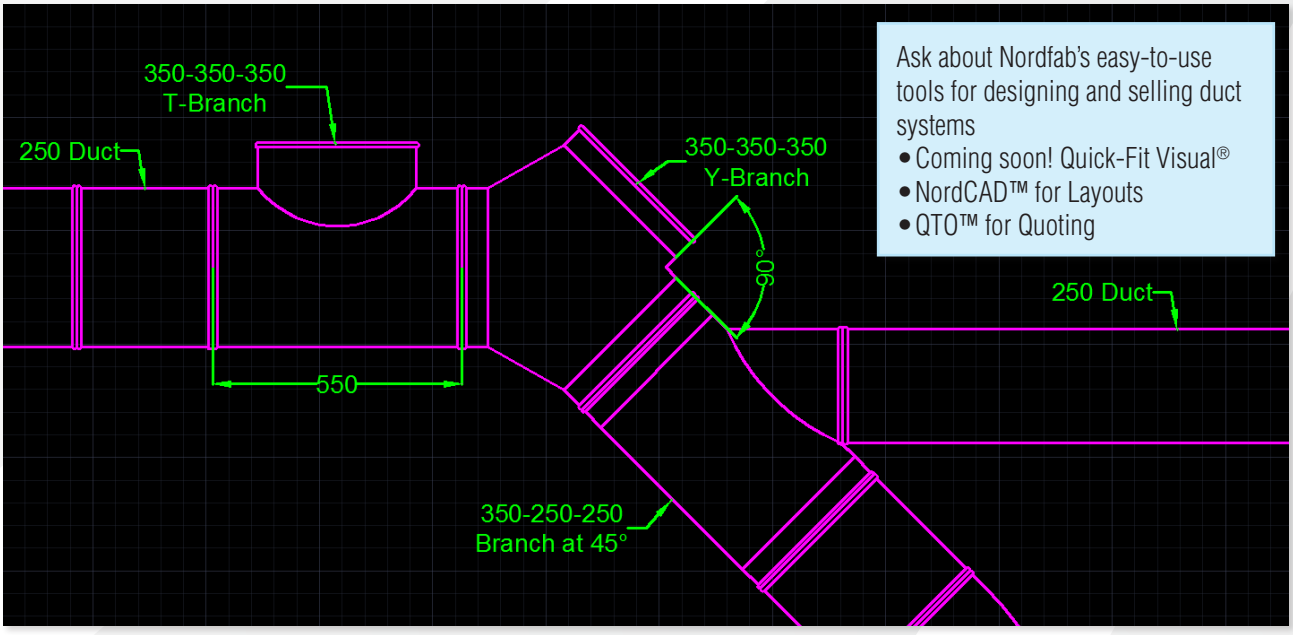

NORDFAB Ducting

Please visit our website to see our General Conditions of Sale.

Nordfab Europe A/S sales and production in Assen Mariager, Denmark

Nordfab UK sales and production in Leeds, England

Nordfab Europe
Industrivej 13
Assens 9550 Mariager, Danmark
+45 86 47 11 00
email salesdk@nordfab.com

Nordfab UK
Limewood Approach Seacroft
Leeds, LS14 1NG Phone
+44 1132 739 400
email uksales@nordfab.com

CERTIFIED ISO 9001 · ISO 14001 UKAS MANAGEMENT SYSTEMS 001

www.nordfab.com

2021-11-24

The world's fastest ducting™