ELTA FANS
IN-LINE MIXED FLOW FAN
IMF100 / 125 / 150 / 200
INCLUDING MODELS WITH BUILT-IN-RUN-ON TIMERS 'T'

Installation and Maintenance Instructions.
THESE INSTRUCTIONS MUST BE READ FULLY BEFORE COMMENCING INSTALLATION.

Owner/Installer: The life of this apparatus and its efficiency will be increased if its use and maintenance is carried out in accordance with these instructions and current statutory requirements. The installation and initial adjustments should be carried out by a qualified and competent technician. Elta Fans Limited should be consulted before substituting or fitting parts from another manufacturer. It is the responsibility of the installer to verify that the installation is in accordance with the following standards and the Owner is given the current User's Manual.

Any modifications to the IMF or its installation, even the smallest modification, change or elimination of security components or pieces that influence the efficiency or loss of ventilation, will result in the CE Certification and Elta Fans warranty being cancelled.

1. General

1.1 It is important that these Installation and Maintenance Instructions are fully adhered to.

1.2 Full details of the unit supplied are shown on the product nameplate. If in doubt about any detail contact Elta Fans Ltd or its agents for clarification.

1.3 All electrical Installations must be carried out by suitably qualified and competent personnel in accordance with all statutory requirements.

1.4 These instructions cover only the Elta Fans Ltd product and do not include the supply or installation of any safety equipment that may be required e.g. adequate guarding or protection from rotating parts and proper electrical isolation.

1.5 Any declarations made by Elta Fans Ltd about product installation and safety, are dependent on the fan being used within installations which themselves meet the requirements of the relevant Standards and Directives of your region.

1.6 The fan is designed for use in an ambient temperature from -20°C up to a maximum of +50°C and up to 95% relative humidity. The fan is not suitable for corrosive or explosive atmospheres.

1.7 The installer should provide easy access to the fan to facilitate future maintenance

1.8 The installer should ensure the fan is adequately supported.

1.9 This appliance can be used by Children aged from 8 years and above and persons with reduced physical, sensory or mental capabilities or lack of experience and knowledge if they have been given supervision or instruction concerning use of the appliance in a safe way and understand the hazards involved. Cleaning and user maintenance shall not be made by children without supervision.

1.10 This product is not intended for use by persons (including children) with reduced physical sensory or mental capabilities, or lack of experience and knowledge, unless they have been given supervision or instruction concerning use of the product by a person responsible for their safety.

1.11 Children should be supervised to ensure that they do not play with the appliance.

1.12 At end-of-life, the unit must be disposed of in an environmentally friendly manner by suitably qualified and competent personnel in accordance with the requirements of applicable Standards and Directives.

2. Installation

WARNING - The fan must be isolated from the power supply during installation and maintenance.

2.1 Upon receipt, the fan should be visually inspected to check for any damage. Ensure that the impeller is free to rotate.

2.2 If the supply cord is damaged, it must be replaced by the manufacturer, its service agent or similarly qualified persons in order to avoid a hazard.

2.3 If there are any queries concerning the fan equipment, Elta Fans Ltd should be contacted prior to the installation.

2.4 The fan must be securely mounted in the desired position to suit the application. A minimum of 1 meter of duct at least the same diameter as the fan spigots diameter is to be fitted to the fan inlet and discharge spigots.

2.5 Minimum 150mm clearance between the fan and the surrounding structure should be reserved

2.6 To install the fan: -

- Remove the fan body from the spigots that are attached to the base by releasing the four screws.
- Mount the base in the desired position using the fasteners supplied.
- Replace the fan body in-between the spigots and tighten the four screws.

2.7 Check the details on the rating plate to ensure that the correct power supply (voltage, frequency and phase) is available. An incorrect power supply will lead to permanent damage of the fan.

2.8 Refer to the appropriate wiring diagram.

2.9 Means for electrical disconnection must be incorporated in the wiring installation in accordance with the relevant wiring and electrical regulations. The isconnection may be achieved by having the plug accessible or by incorporating a switch in the fixed wiring in accordance with the wiring regulations.

2.10 Precaution must be taken to locate the exhaust discharge terminal so as to avoid the backflow of gases into the room from the open flue of gas or other fuel burning appliances.

2.11 Fans fitted with run-on timers have settings adjustable between 2 to 30 minutes.

3. Start-up

3.1 Before power is supplied to the unit, check that the wiring is correct as per the fan connection diagram.
3.2 At initial start-up, check that impeller rotation and airflow direction is correct.
3.3 Check that the motor amperage drawn does not exceed the nameplate rating.

4. Fan Maintenance

4.1 Inspection of the fan at least once every 12 months is recommended to ensure that the motor, fan blades, and supporting guards, are clean. Any build-up of dust and deposit on the blades or guards should be removed using a non-abrasive cleaner.
4.2 All fastenings should be checked for tightness. In addition, all rotating items should be checked.
4.3 Bearings are of the “sealed for life” type and will not need a detailed inspection.

WARNING – This fan is fitted with a one shot thermal fuse which switches the fan off in the event of a fault condition. Do not cover the air inlet and outlet. Only a suitably qualified and competent person may carry out maintenance after the electrical supply has been isolated.

5. Wiring Diagrams

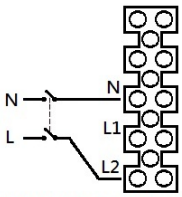

Standard Version (Low Speed)

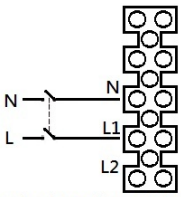

Standard Version (High Speed)

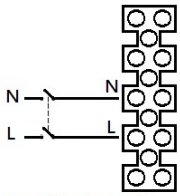

Standard Version with Speed Selection Switch

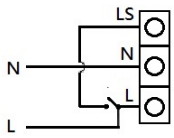

Timer Version with or without Speed Selection Switch

6. Product Information

Single phase 220V to 240V 50Hz or 220V 60Hz

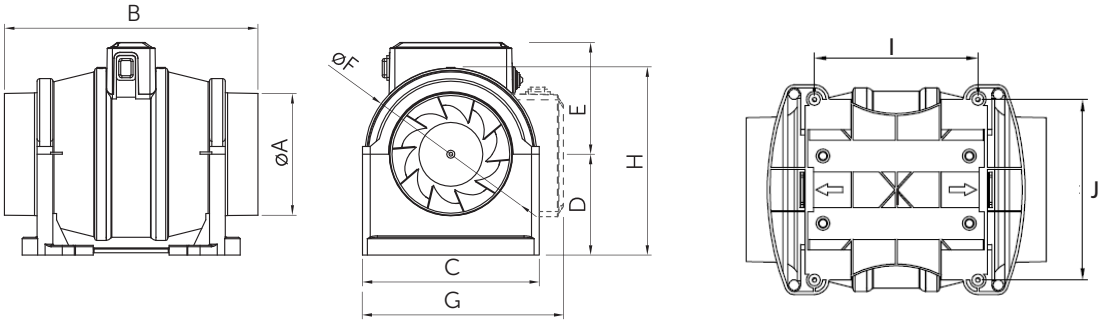

Model	Speed r/min		Dimensions (mm)										Electrical Data		Weight (kg)
			ØA	B	C	D	E	ØF	G	H	I	J	FLC Amps	Input W	
IMF100	High	2300	97	296	179	104	113	174	202	190	140	154	0.117	27	2.4
	Low	2000											0.116	27	
IMF125	High	2300	124	256	179	102	113	174	202	190	140	154	0.148	34	2.4
	Low	2000											0.143	33	
IMF150	High	2400	147	298	194	109	127	195	223	211	182	170	0.291	67	3
	Low	1900											0.252	58	
IMF200	High	2480	198	310	254	129	146	228	272	243	120	236	0.56	120	4
	Low	2266											0.53	113	

Warranty

Elta Fans or its agents will, within a period of 1 year from the date of dispatch from their works, at its option, replace any goods, which are proven to have defects as a result of defective materials or workmanship. The goods MUST be inspected by a Elta Fans official and if necessary returned, with a Returns Note Number, carriage paid, for further examination.

Elta Fans Limited
Building Services
46 Third Avenue
Pensnett Trading Estate
Kingswinford,
West Midlands
DY6 7US, United Kingdom

Tel: +44 (0) 1384 275800
Fax: +44 (0) 1384 275810
email: bs@eltafans.co.uk

Elta Fans Ltd
Export
17 Barnes Walls Road
Segensworth East Industrial Estate
Fareham,
Harmpshire
PO15 5ST, United Kingdom

Tel: +44 (0) 1489 566500
Fax: +44 (0) 148 9566555
email: export@eltafans.co.uk

Idealair Group Pty Ltd
Unit 9a, 149-163 Mitchell Rd
Erskineville
NSW, 2043

Tel: +61 (02) 96988130
Fax: +61 (02) 96988132
email: info@idealairgroup.com.au

AMS
11 Ingrid Road
Montague Gardens
7442 Cape Town
Western Cape

Tel: +44 (0)21 552 1077
Fax: +44 (0)21 552 2797

Notes

Notes

DISPOSAL AND RECYCLING

Information on disposal of units at the end of life.
This product complies with EU Directive 2002/96/EC.
The symbol of the crossed-out dustbin indicates that this product must be collected separately from other waste at the end of its life. The user must, therefore, dispose of the product in question at suitable electronic and electro-technical waste disposal collection centres, or else send the product back to the retailer when purchasing a new, equivalent type device.
Separate collection of decommissioned equipment for recycling, treatment and environmentally compatible disposal helps to prevent negative effects on the environment and on health and promotes the recycling of the materials that make up the equipment.
Improper disposal of the product by the user may result in administrative sanctions as provided by law.

IMF Issue 2 29.07.2014