Product 5816 GBD EC 710 A

Image

Characteristics

Static pressure Pa

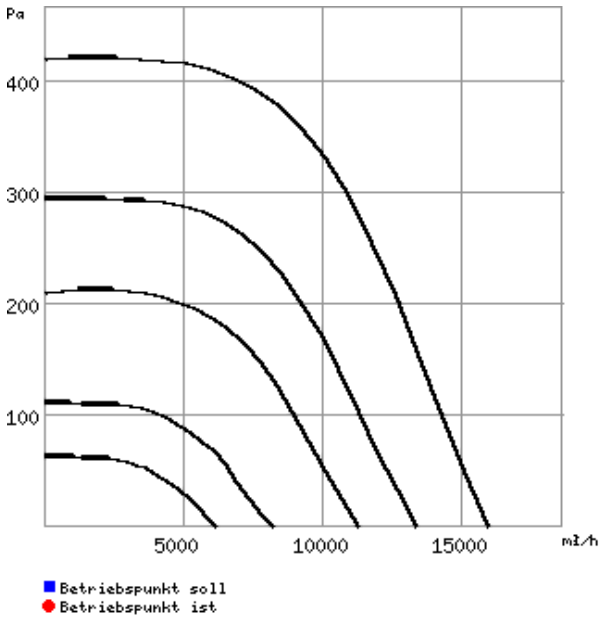

Air flow volume m³/h

Properties

Ref.no.	5816 - 001
Model	GBD EC 710 A
Description	Gigabox EC-centrifugal fan incl. discharge adapter & flex. Sleeve DN 710 3-PH 380-480V 50/60Hz controllable
Actual pressure	static
Actual volume	
Max.Vol.	15890 m³/h
Speed	775 min-1
FLC un-controlled	2.40 A
STC un-controlled	
Power	1.50 kW
Voltage	400 V / 3 ph / 50 Hz
Max.temp.	50 °C
Wiring diagram no.	976
Weight	119.00 kg
Delivery time	On request
Acoustic data:	
Sound in-duct	53 in 4 m
Case breakout	42 in 4 m

Intake	**Hz**	**Total**	**125**	**250**	**500**	**1k**	**2k**	**4k**	**8k**
Lwa Intake	dB(A)	73	60	64	66	68	66	61	59
Lwa Extract	dB(A)	75	60	67	69	72	68	63	62
Lwa Breakout	dB(A)	62	58	57	52	51	50	46	44

Description

GBD EC 710 A
Gigabox EC-centrifugal fan incl. discharge adapter &
flex. Sleeve DN 710
3-PH 380-480V 50/60Hz controllable

Energy-saving cubic ventilation box with intake and extract spigots, with flexible sleeves to reduce vibration transmission and variable applicable side panels to suit structual conditions. Simple positioning by standard crane hooks.

Self-supporting frame construction made from hollow aluminum profiles. Lined with 20 mm thick double-walled side panels made from galvanised sheet steel, sound and thermally insulated with flame-retardent minal wool. The casing panels can be replaced as required with accessories, such as the external weather louvre and condensate collector. Other accessories, wall bracket and outdoor cover hood.

Free-running backward curved centrifugal impeller from aluminium, direct driven. Energy efficient with low noise development. Dynamically balanced with the motor to DIN ISO 1940 Pt.1 – class 6.3

Energy-saving, speed controllable EC-external rotor motor with highest efficiency, protection to IP 54.With ball bearings, maintenance-free and interference-free. Integrated electronic temperature monitoring for EC motor and electronics. Stepless speed control with potentiometer or stepless speed control with universal control system EUR-EC. Electrical connection via standard terminal box (IP 54), which is mounted with a permanently attached cable.

Accessories

Image	Ref.no.	Model	Description	Group
	1347	EUR EC	Universal controller for stepless control of EC-fans	E
	Additional part to product 1347:			
	6532	AFS 0-10V	Absolute Humidity Sensor With 0-10 V output	A
	1322	LDF 500	PRESSURE SENSOR FOR EUR 6, 0-500 PA MESSBEREICH 0-500 PA	A
	1325	LGF 10	AIR FLOW SPEED SENSOR FOR EUR 6	A
	1336	LTA 40	Outdoor temperature sensor to EUR 6 Temperature range: -20 to +60 °C	A
	1324	LTK 40	DUCT TEMPERATURE SENSOR FOR EUR 6	A
	1323	LTR 40	ROOM TEMPERATURE SENSOR FOR EUR 6	A
	5646	GB-KW 710/EC630	Condensate collector for Gigabox ND 710	G
	5750	GB-WSD 710/EC630	Outdoor cover hood for Gigabox ND 710	G
	5641	GB-WSG 710	External weather louver for Gigabox ND 710	G
	1737	PA 24	Speed potentiometer with operating status signal 24V DC, surface installation	E
	1736	PU 24	Speed potentiometer with LED-light ring 24V DC, flush mounted	E
	5627	SDD-U	Anti-vibration mounts for installation indoors	G

Wiring diagram

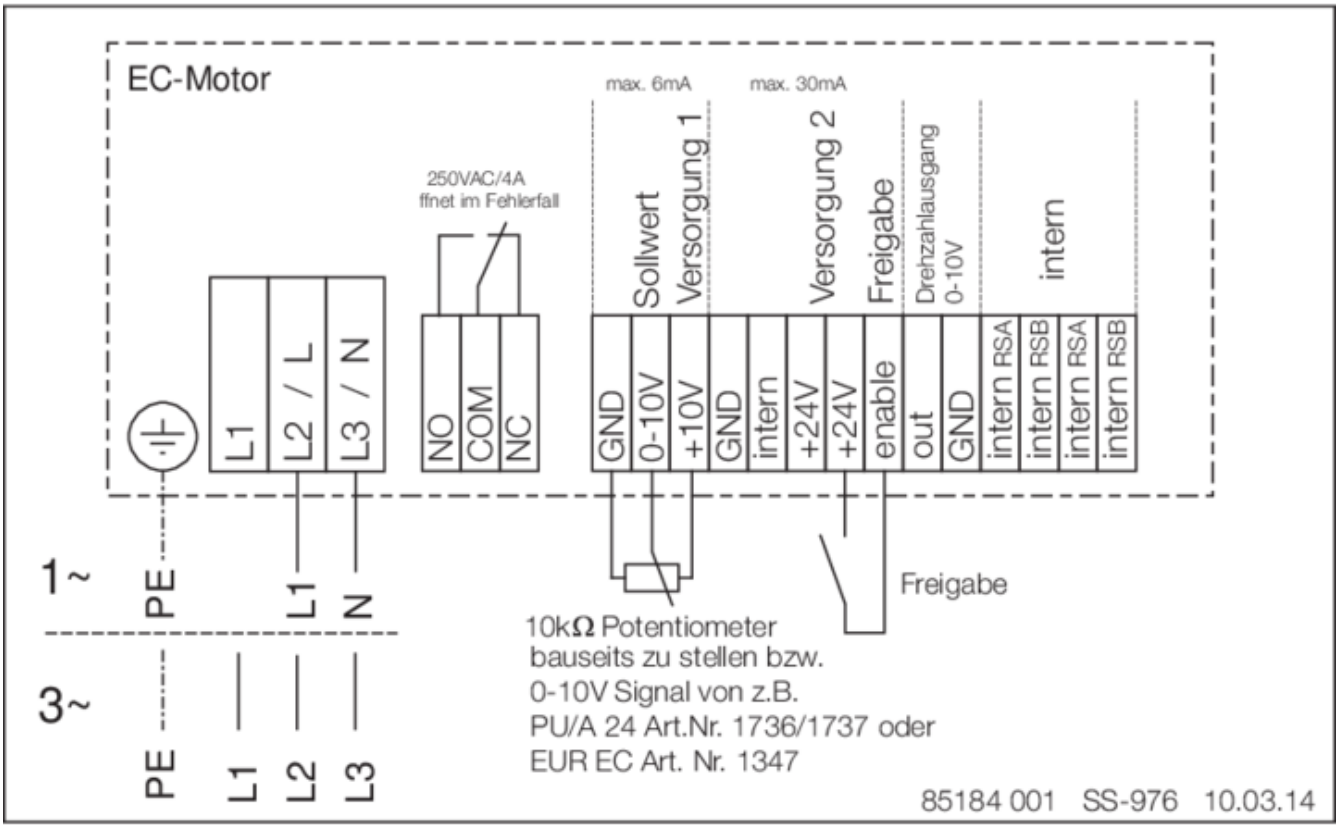
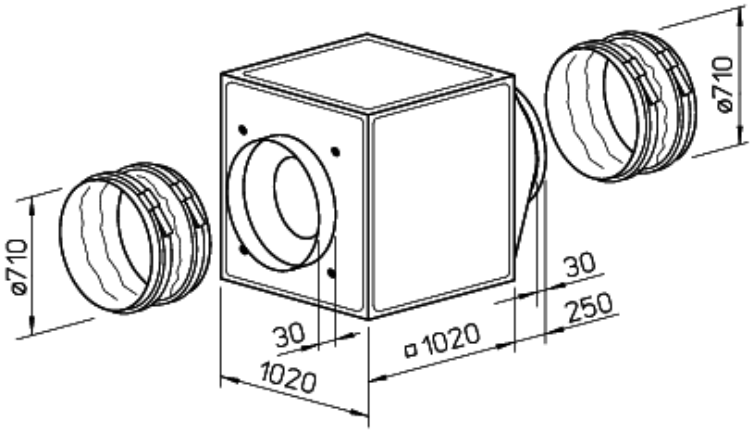
Dimensions