DRAWING - 630 MM

630 MM (DX641453)

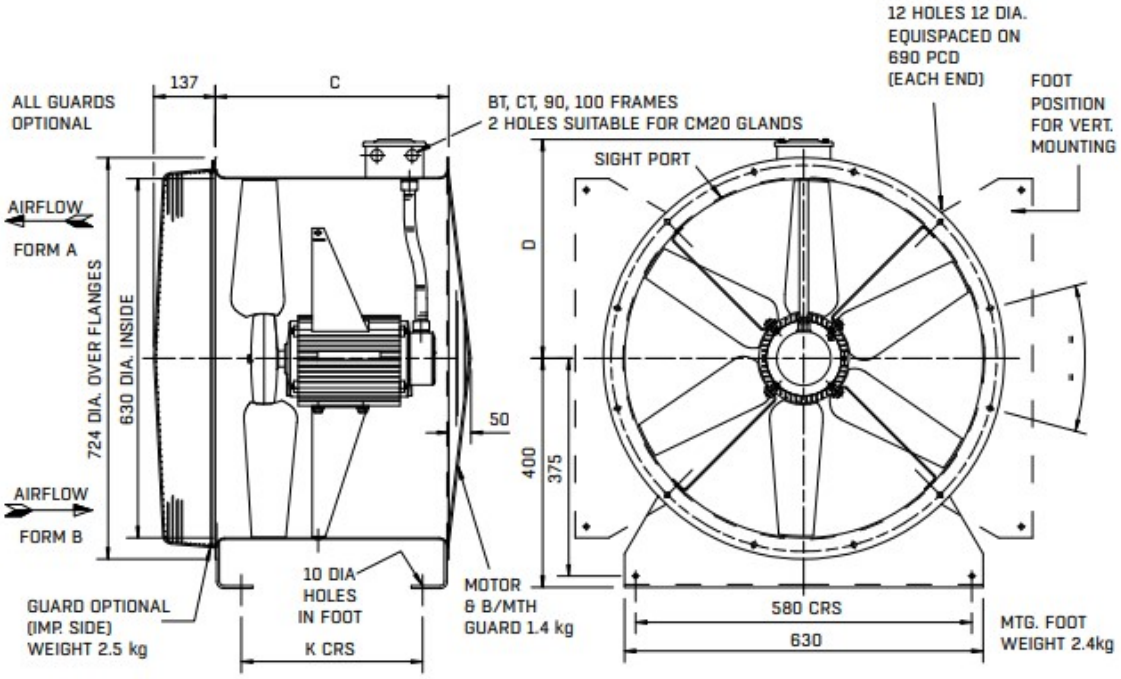

Size	Motor Frame	C	D	K	Weight kg Fan
630	CT9	375	403	290	52